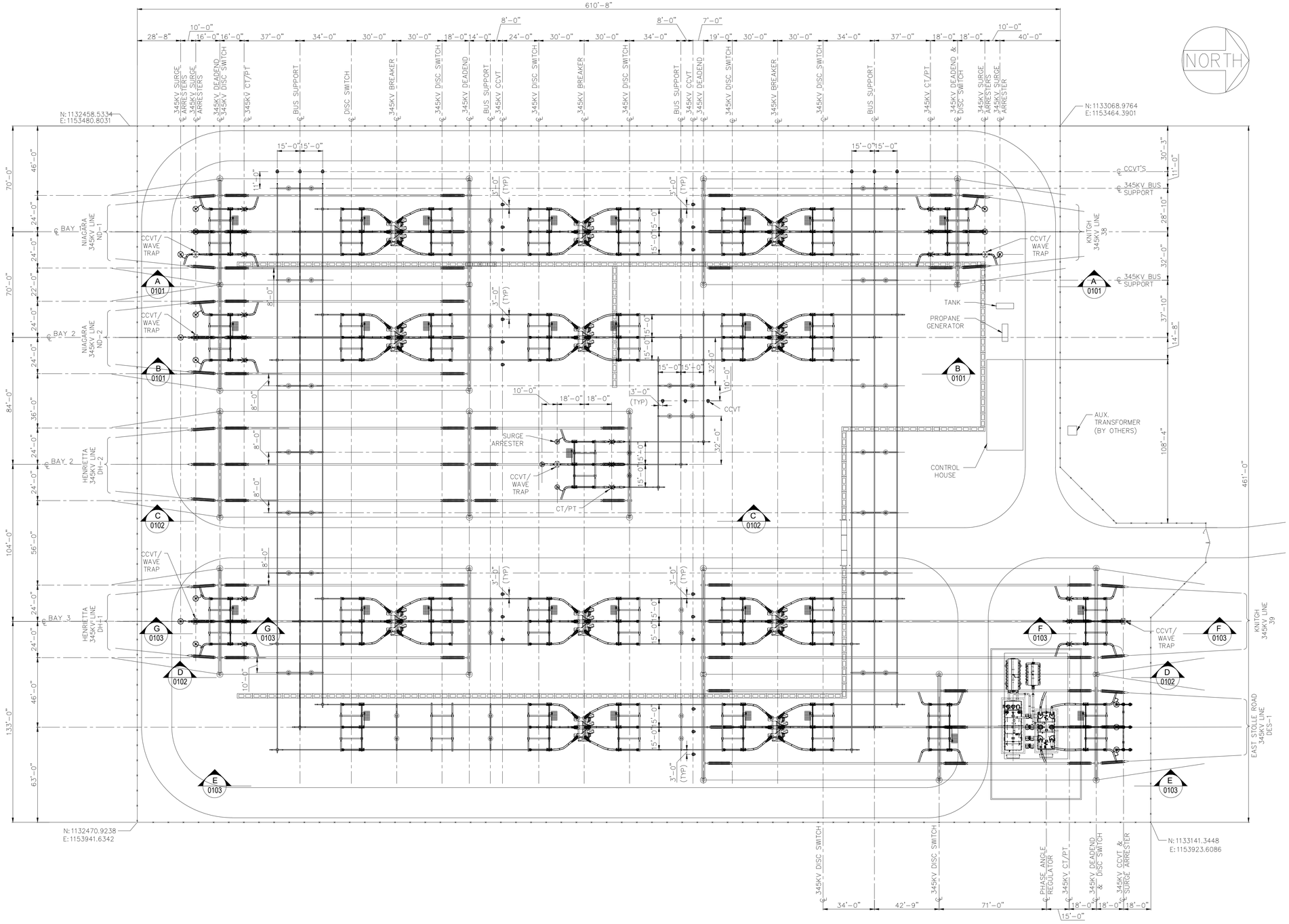

ELECTRICAL CLEARANCES

DESCRIPTION	VOLTAGE CLASS SYSTEM
OPERATING VOLTAGE	345 kV
BIL	1300 kV
CENTERLINE TO CENTERLINE FOR Φ TO Φ* FOR RIGID BUS*	14'-6"
MINIMUM Φ TO GROUND**	8'-1"
BOTTOM OF INSULATOR OR BUSHING PORCELAIN TO FDN. TOP***	8'-6"
VERTICAL CLEARANCE OF UNGUARDED LIVE PARTS TO FDN. TOP ***	17'-9"
CLEARANCE FROM PERIMETER FENCE TO LIVE PARTS****	19'-0"
HIGH BUS HEIGHT, BUS CENTERLINE ABOVE FDN.**	32'-0"
LOW BUS HEIGHT, BUS CENTERLINE ABOVE FDN.**	20'-0"

*PER ANSI C37.32-2002, TABLE 5
**PER IEEE 1427-2006, TABLE 3
*** PER NESC, ANSI C-2, RULE 124
*** PER NESC, ANSI C-2, RULE 110

PRELIMINARY
FOR PERMIT ONLY

LEGEND

- GATE CATCH
- F — FIXED BUS FITTING
- S — SLIP BUS FITTING
- SWITCH OPERATOR
- STRUCTURE MOUNTED YARD LIGHTING
- SUBSTATION FENCE
- OPGW
- SHIELD WIRE

REFERENCE DRAWINGS:

DYS-E1-1000	SWITCHING DIAGRAM
DYS-E1-0011	DRAWING LIST
DYS-E1-0101	SECTIONS A-A & B-B
DYS-E1-0102	SECTIONS C-C & D-D
DYS-E1-0103	SECTIONS E-E, F-F & G-G

NO	DATE	REVISIONS AND RECORD OF ISSUE	DRWN	REV'D	APPR	COMP
B	08/21/2020	PRELIMINARY RELEASE - ISSUED FOR PERMITS	SV	JGO	KVP	S&L
A	02/28/2020	PRELIMINARY- ISSUED FOR BIDS	SV	MLA	--	S&L

SCALE:
0 16FT 32FT 64FT
SCALE: 1/32"=1-0"

PREP: SV CHKD: JGO
APPD: KVP DATE: S&L

CONTRACTOR/INSTALLER SHALL TAKE ALL APPROPRIATE PRECAUTIONS TO ENSURE THE SAFETY OF ALL PEOPLE LOCATED ON THE WORK SITE; INCLUDING CONTRACTOR'S //INSTALLER'S PERSONNEL (OR THAT OF IT'S SUB-CONTRACTOR(S)) PERFORMING THE WORK.

ANY MODIFICATION OR ADDITION TO THIS DRAWING BY ANY ORGANIZATION OTHER THAN SARGENT & LUNDY IS NOT THE RESPONSIBILITY OF SARGENT & LUNDY.

Sargent & Lundy
55 EAST MONROE ST., CHICAGO, ILL.

NEXTera ENERGY TRANSMISSION NEW YORK

NEXTERA ENERGY TRANSMISSION NEW YORK, INC
DYSINGER 345 KV SWITCHYARD
GENERAL ARRANGEMENT
4 BAY BREAKER AND HALF

DSY-E1-0100

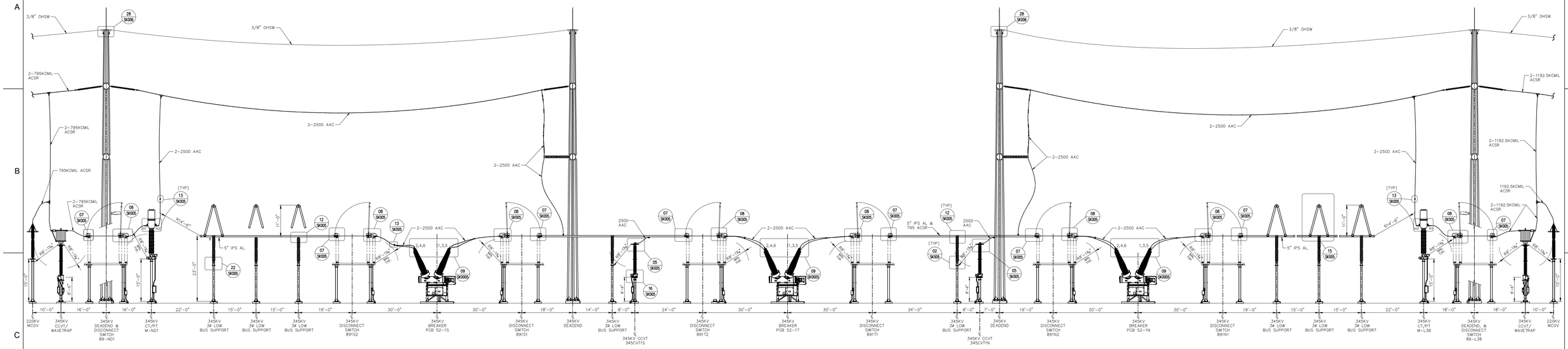

SECTION A
SCALE: AS NOTED 0100

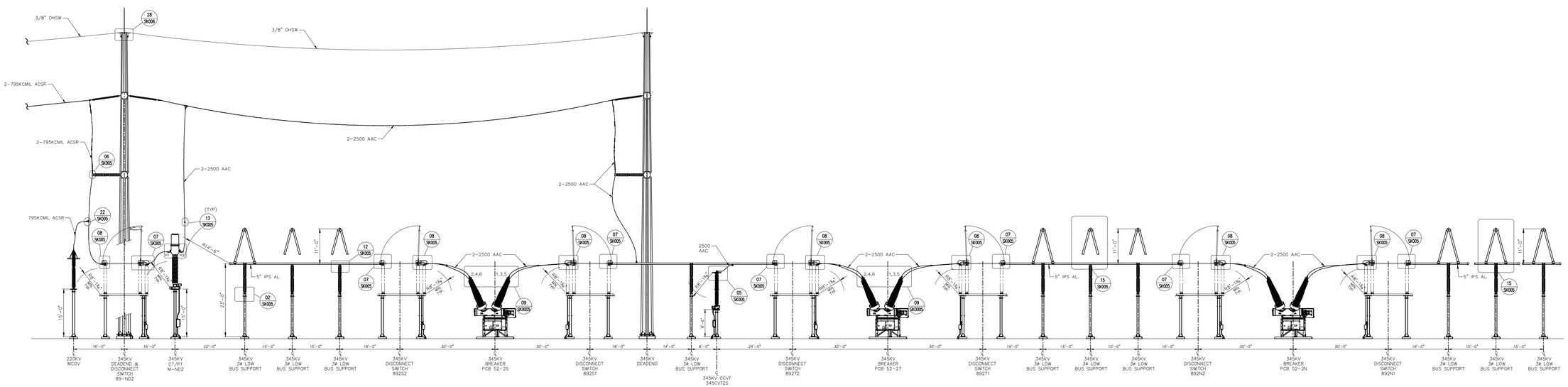

SECTION B
SCALE: AS NOTED 0100

PRELIMINARY
FOR PERMIT ONLY

REFERENCE DRAWINGS:

DYS-E1-1000	SWITCHING DIAGRAM
DYS-E1-0011	DRAWING LIST
DYS-E1-0100	GENERAL ARRANGEMENT
DYS-E1-0102	SECTIONS C-C & D-D
DYS-E1-0103	SECTIONS E-E, F-F & G-G

NO	DATE	REVISIONS AND RECORD OF ISSUE	DRWN	REV'D	APPR	COMP
B	08/21/2020	PRELIMINARY RELEASE - ISSUED FOR PERMITS	SV	JGO	KVP	S&L
A	02/28/2020	PRELIMINARY- ISSUED FOR BIDS	SV	MLA	--	S&L

SCALE: 1/16"=1'-0"

PREP: SV CHKD: JGO
APPD: KVP DATE: 08/21/2020

CONTRACTOR/INSTALLER SHALL TAKE ALL APPROPRIATE PRECAUTIONS TO ENSURE THE SAFETY OF ALL PEOPLE LOCATED ON THE WORK SITE; INCLUDING CONTRACTOR'S /INSTALLER'S PERSONNEL (OR THAT OF IT'S SUB-CONTRACTOR(S)) PERFORMING THE WORK.

ANY MODIFICATION OR ADDITION TO THIS DRAWING BY ANY ORGANIZATION OTHER THAN SARGENT & LUNDY IS NOT THE RESPONSIBILITY OF SARGENT & LUNDY.

Sargent & Lundy
55 EAST MONROE ST., CHICAGO, ILL.

NEXTera ENERGY TRANSMISSION NEW YORK

NEXTERA ENERGY TRANSMISSION NEW YORK, INC
DYSINGER 345 KV SWITCHYARD
SECTION A-A & B-B

DSY-E1-0101

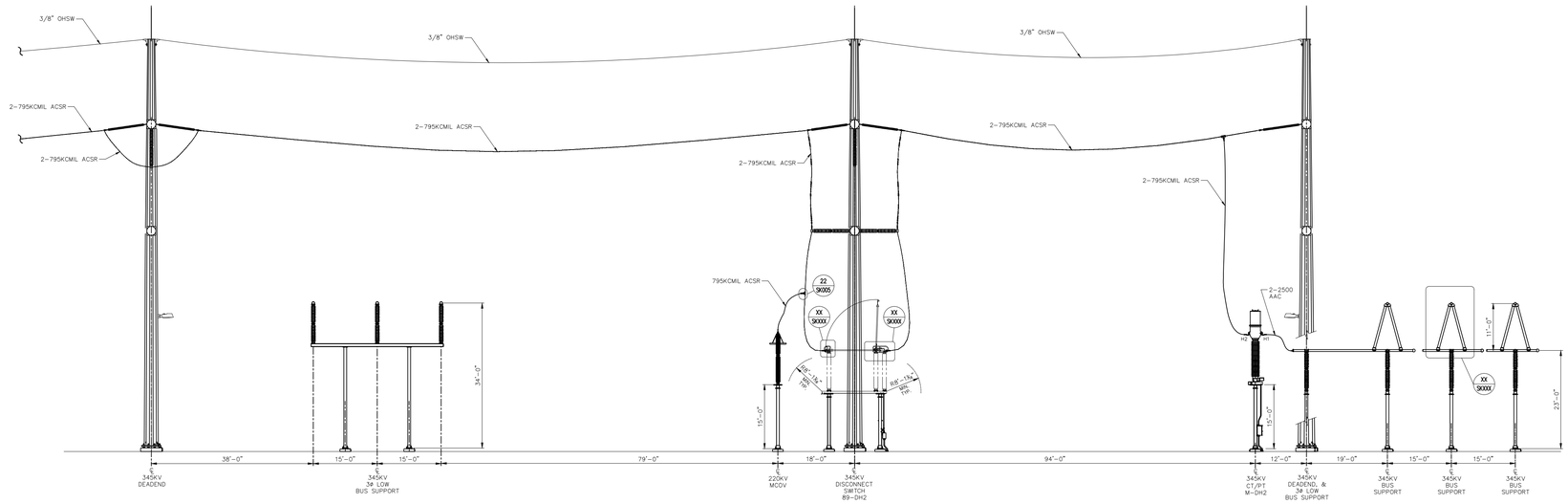

SECTION C
SCALE: AS NOTED 0100

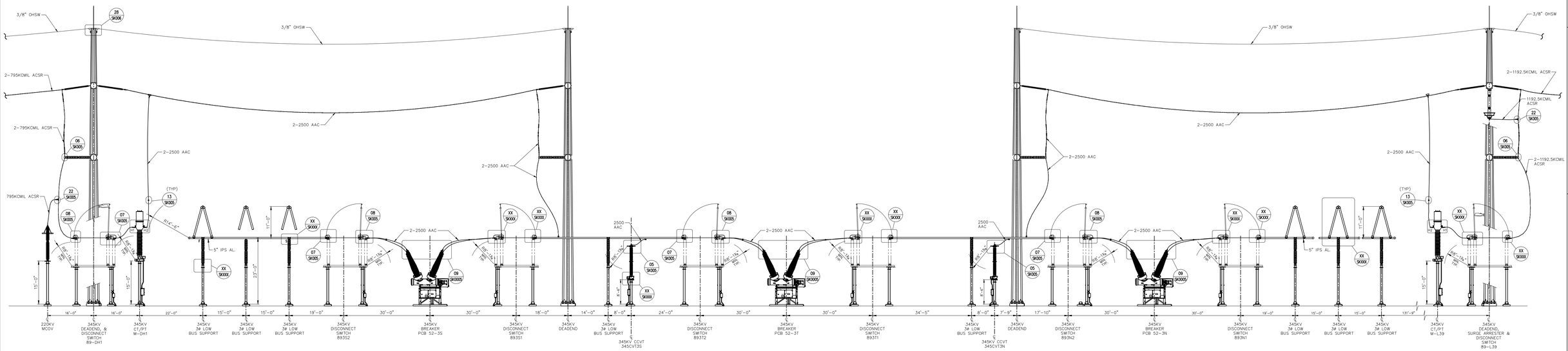

SECTION D
SCALE: AS NOTED 0100

PRELIMINARY
FOR PERMIT ONLY

REFERENCE DRAWINGS:

DYS-E1-1000	SWITCHING DIAGRAM
DYS-E1-0011	DRAWING LIST
DYS-E1-0100	GENERAL ARRANGEMENT
DYS-E1-0101	SECTIONS A-A & B-B
DYS-E1-0103	SECTIONS E-E, F-F & G-G

NO	DATE	REVISIONS AND RECORD OF ISSUE	DRWN	REV'D	APPR	COMP
B	08/21/2020	PRELIMINARY RELEASE - ISSUED FOR PERMITS	SV	JGO	KVP	S&L
A	02/28/2020	PRELIMINARY- ISSUED FOR BIDS	SV	MLA	--	S&L

SCALE: 1/16"=1'-0"
PREP: SV CHKD: JGO
APPD: KVP DATE: 08/21/2020

CONTRACTOR/INSTALLER SHALL TAKE ALL APPROPRIATE PRECAUTIONS TO ENSURE THE SAFETY OF ALL PEOPLE LOCATED ON THE WORK SITE; INCLUDING CONTRACTOR'S //INSTALLER'S PERSONNEL (OR THAT OF IT'S SUB-CONTRACTOR(S)) PERFORMING THE WORK.

ANY MODIFICATION OR ADDITION TO THIS DRAWING BY ANY ORGANIZATION OTHER THAN SARGENT & LUNDY IS NOT THE RESPONSIBILITY OF SARGENT & LUNDY.

Sargent & Lundy
55 EAST MONROE ST., CHICAGO, ILL.

NEXTera ENERGY
TRANSMISSION NEW YORK

NEXTERA ENERGY TRANSMISSION NEW YORK, INC
DYSINGER 345 KV SWITCHYARD
SECTION C-C & D-D

DSY-E1-0102

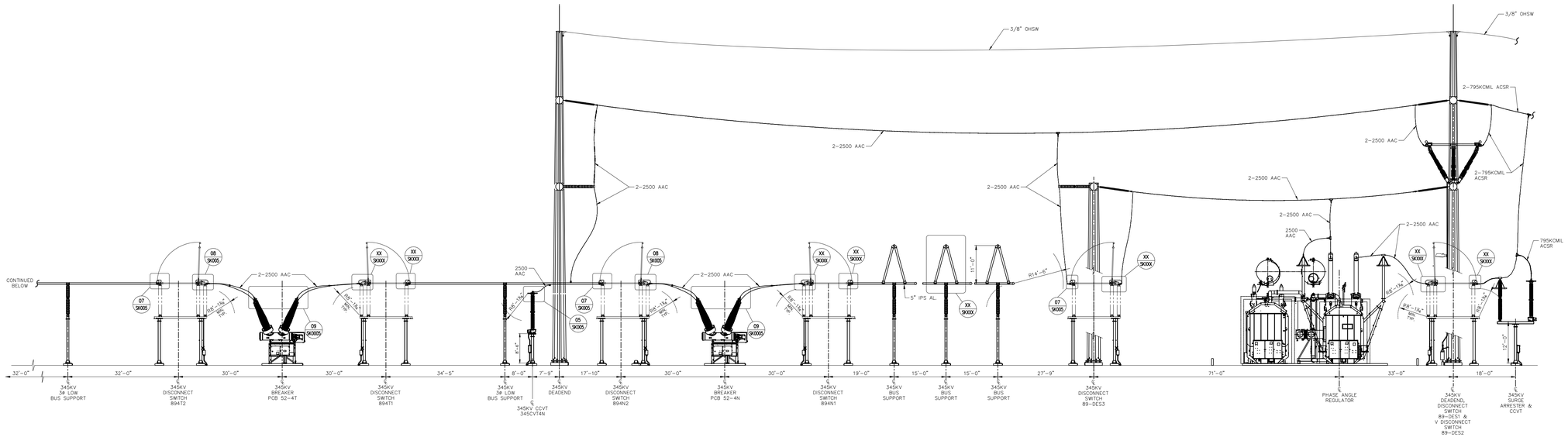

SECTION E
SCALE: AS NOTED 0100

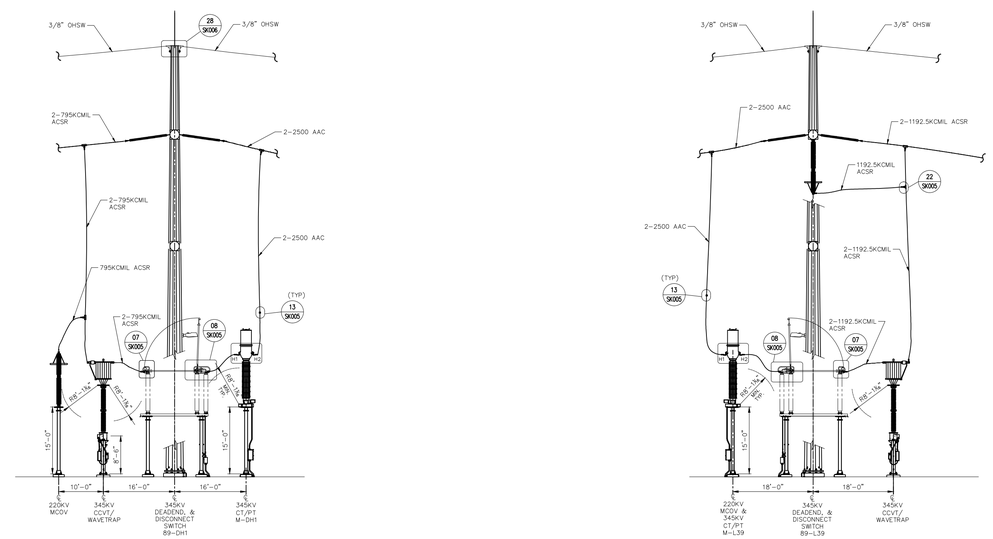

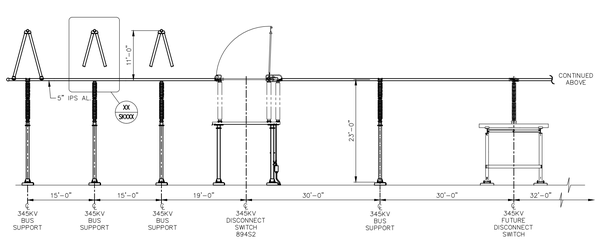

SECTION E
SCALE: AS NOTED 0100

SECTION G
SCALE: AS NOTED 0100

SECTION F
SCALE: AS NOTED 0100

PRELIMINARY
FOR PERMIT ONLY

REFERENCE DRAWINGS:

DYS-E1-1000	SWITCHING DIAGRAM
DYS-E1-0011	DRAWING LIST
DYS-E1-0100	GENERAL ARRANGEMENT
DYS-E1-0101	SECTIONS A-A & B-B
DYS-E1-0102	SECTIONS C-C & D-D

NO	DATE	REVISIONS AND RECORD OF ISSUE	DRWN	REV'D	APPR	COMP
B	08/21/2020	PRELIMINARY RELEASE - ISSUED FOR PERMITS	SV	JGO	KVP	S&L
A	02/28/2020	PRELIMINARY- ISSUED FOR BIDS	SV	MLA	--	S&L

SCALE: 1/16"=1'-0"

PREP: SV CHKD: JGO
APPD: KVP DATE: 08/21/2020

CONTRACTOR/INSTALLER SHALL TAKE ALL APPROPRIATE PRECAUTIONS TO ENSURE THE SAFETY OF ALL PEOPLE LOCATED ON THE WORK SITE; INCLUDING CONTRACTOR'S /INSTALLER'S PERSONNEL (OR THAT OF IT'S SUB-CONTRACTOR(S)) PERFORMING THE WORK.

ANY MODIFICATION OR ADDITION TO THIS DRAWING BY ANY ORGANIZATION OTHER THAN SARGENT & LUNDY IS NOT THE RESPONSIBILITY OF SARGENT & LUNDY.

Sargent & Lundy
55 EAST MONROE ST., CHICAGO, ILL.

NEXTera ENERGY TRANSMISSION NEW YORK

NEXTERA ENERGY TRANSMISSION NEW YORK, INC
DYSINGER 345 KV SWITCHYARD
SECTION E-E, F-F & G-G

DSY-E1-0103

CONCRETE GENERAL NOTES SHEET 1

1.0 GENERAL

1.1 ABBREVIATIONS AND DEFINITIONS

AB	=	ANCHOR BOLT
AR	=	ANCHOR ROD
BPL	=	BASE PLATE
BM	=	BEAM
BOTT	=	BOTTOM
B/	=	BOTTOM OF
℄	=	CENTERLINE
C TO C	=	CENTER TO CENTER
CHKD PL	=	CHECKERED PLATE
CEA	=	EXPANSION ANCHOR
CJ	=	CONSTRUCTION JOINT
CLR	=	CLEAR
COL	=	COLUMN
CONC	=	CONCRETE
CONT	=	CONTINUOUS
DET	=	DETAIL
DIA	=	DIAMETER
Ø	=	DIAMETER
DWLS	=	DOWELS
DWG	=	DRAWING
EF	=	EACH FACE
EL	=	ELEVATION
EQ	=	EQUAL
EW	=	EACH WAY
FDN	=	FOUNDATION
FL	=	FLOOR
FS	=	FAR SIDE
Fy	=	YIELD STRESS
GALV	=	GALVANIZED
GPL	=	GUARD PLATE
GR	=	GRADE
GRTG	=	GRATING
HP	=	HIGH POINT
HR	=	HANDRAIL
ID	=	INSIDE DIAMETER
INV	=	INVERT
IP	=	IN PLACE
LG	=	LENGTH, LONG
LL	=	LIVE LOAD
LP	=	LOW POINT
MAX	=	MAXIMUM
MIN	=	MINIMUM
NS	=	NEAR SIDE
NTS	=	NOT TO SCALE
OC	=	ON CENTER
OD	=	OUTSIDE DIAMETER
PL	=	PLATE
PROJ	=	ANCHOR ROD PROJECTION ABOVE ROUGH CONCRETE
PT	=	POINT OF TANGENCY
R	=	RADIUS
REF	=	REFERENCE
REM	=	REMOVABLE
REQD	=	REQUIRED
SECT	=	SECTION
SPA	=	SPACES
SS	=	STAINLESS STEEL
SYMM	=	SYMMETRICAL
T & B	=	TOP AND BOTTOM
T/	=	TOP OF
T/C	=	TOP OF CONCRETE
T/G	=	TOP OF GRATING
T/S	=	TOP OF STEEL
TYP	=	TYPICAL
UN	=	UNLESS NOTED
VB	=	VERTICAL BRACING
WP	=	WORK POINT
WS	=	WATER STOP
WWF	=	WELDED WIRE FABRIC
WWR	=	WELDED WIRE REINFORCEMENT

1.2 SYMBOLS

SLOPE → = INDICATES DIRECTION OF DOWNWARD SLOPE.

= INDICATES DIRECTION OF BAR GRATING SPAN.

= INDICATES CHECKERED PLATE.

GENERAL (CONTINUED)

1.3 DESIGNATIONS

1.3.1 NOT USED

1.4 STRUCTURAL DESIGN DATA

1.4.1 STRUCTURAL DESIGN IS BASED ON THE APPLICABLE REQUIREMENTS OF THE PROJECT DESIGN CRITERIA AND LATEST EDITION OF ACI 318 & 350.

1.4.2 SOILS ARE CLASSIFIED AS INDICATED IN THE GEOTECHNICAL REPORT PER ASTM D2487.

1.4.3 FOUNDATION DESIGNS ARE BASED ON THE FINAL GEOTECHNICAL REPORT DATED 03/2019 PERFORMED BY EMPIRE GEOTECHNICAL ENGINEERING SERVICES PROJECT NO. WB-18-115 DS. CONTRACTOR IS TO FOLLOW ALL REQUIREMENTS SPECIFIED IN THE GEOTECHNICAL REPORT.

1.5 CONSTRUCTION NOTES:

1.5.1 UNDERGROUND OR EMBEDDED UTILITIES ARE [MAY BE] LOCATED WITHIN OR ADJACENT TO THE AREA IN WHICH EXCAVATION, DEMOLITION, FOUNDATION OR MODIFICATION WORK IS TO BE PERFORMED.

1.5.2 REFERENCES RELATING TO THE UNDERGROUND OR EMBEDDED UTILITIES ARE PROVIDED TO ASSIST THE CONTRACTOR/INSTALLER IN THE FIELD LOCATING THOSE UTILITIES AND OTHER POSSIBLE UNDERGROUND OR EMBEDDED INTERFERENCES WITH THE WORK.

1.5.3 THE CONTRACTOR/INSTALLER SHALL EXERCISE DUE CAUTION DURING ALL EXCAVATION/ FOUNDATION/ DEMOLITION WORK.

1.5.4 CONTRACTOR/INSTALLER SHALL TAKE ALL APPROPRIATE PRECAUTIONS TO ENSURE THE SAFETY OF ALL PEOPLE LOCATED ON THE WORK SITE, INCLUDING CONTRACTOR'S/INSTALLER'S PERSONNEL (OR THAT OF ITS SUBCONTRACTOR(S)) PERFORMING THE WORK.

2.0 CONCRETE WORK

2.1 CONCRETE COVER REQUIREMENTS

REINFORCING BARS ADJACENT TO THE FACE OF CONCRETE SHALL HAVE THE FOLLOWING MINIMUM CONCRETE COVER UNLESS NOTED ON DESIGN DRAWINGS:

2.1.1 CONCRETE CAST AGAINST EARTH OR OTHER SURFACE NOT FORMED .....3"

2.1.2 FORMED CONCRETE SURFACES PERMANENTLY IN CONTACT WITH SOIL OR EXPOSED TO WEATHER .....2"

2.1.3 TOP BARS OF CONCRETE MATS AT GRADE .....2"

2.1.4 ALL OTHER CONDITIONS ..... 1 1/2"

CONCRETE WORK (CONTINUED)

2.2 REINFORCING LAP SPLICE, DEVELOPMENT LENGTH AND STANDARD HOOK REQUIREMENTS

FOR STANDARD HOOKS SEE NOTE 2.2.3. FOR STRAIGHT BARS, LAP SPLICE AND DEVELOPMENT LENGTH REQUIREMENTS ARE GIVEN IN THE TABLES FOR NOTE 2.2.4 AND ARE BASED ON THE FOLLOWING PARAMETERS:

- REINFORCING STEEL STRENGTH Fy=60,000 PSI
- BARS NOT BUNDLED
- UNCOATED BARS
- NORMAL WEIGHT CONCRETE
- CLASS B SPLICES (LST=1.3xELT AND LSO=1.3xELO)
- CONCRETE STRENGTH (f'c) AS NOTED IN THE TABLES
- REINFORCING CLEAR COVER AND CENTER TO CENTER SPACING EQUAL TO, OR GREATER THAN, MINIMUM VALUES IN TABLES. THE CLEAR COVER SHALL BE THE SMALLER OF THE COVER TO THE FACE OR EDGE OF THE CONCRETE INDICATED IN THE SKETCH

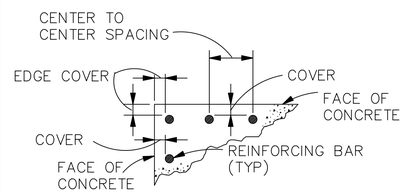

WHERE CONDITIONS LISTED ABOVE ARE NOT MET, LENGTHS IN THE TABLES SHALL BE ADJUSTED WITH THE APPROVAL OF THE CONSULTING ENGINEER.

2.2.1 WHERE REINFORCING BARS OF TWO DIFFERENT SIZES ARE SPLICED, THE SPLICE LENGTH SHALL BE THE REQUIRED LAP SPLICE LENGTH FOR THE SMALLER BAR, BUT NOT LESS THAN THE DEVELOPMENT LENGTH FOR THE LARGER BAR.

2.2.2 ANY HORIZONTAL REINFORCING BAR, OR BAR BENT LESS THAN 45° FROM HORIZONTAL REGARDLESS OF LOCATION, WITH MORE THAN 12" OF CONCRETE CAST BELOW THE BAR, SHALL BE CONSIDERED AS A "TOP BAR". VERTICAL BAR AND HORIZONTAL REINFORCING BAR WITH LESS THAN 12" OF CONCRETE CAST BELOW THE BAR SHALL BE CONSIDERED AS AN "OTHER BAR".

2.2.3 FOR A STANDARD HOOK, THE SCHEDULE BELOW IS BASED ON A SIDE COVER OF NOT LESS THAN 2 1/2" AND THE COVER OVER THE BAR EXTENSION BEYOND THE HOOK OF NOT LESS THAN 2". IF THESE COVER REQUIREMENTS ARE NOT MET, THE VALUES FOR Ldh SHALL BE MULTIPLIED BY 1.43.

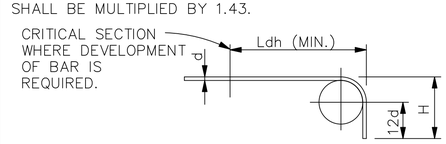

STANDARD HOOK LENGTHS
REINFORCING STEEL Fy=60,000 PSI
LENGTHS GIVEN IN INCHES

BAR SIZE	CONCRETE STRENGTH f'c = 4,500 PSI	
	H	Ldh
3	6	6
4	8	7
5	10	8
6	12	10
7	14	11
8	16	13
9	20	15
10	22	16
11	24	18

CONCRETE WORK (CONTINUED)

2.2.4 LAP AND DEVELOPMENT LENGTHS FOR CONCRETE STRENGTH f'c = 4,500 PSI

CONCRETE STRENGTH: f'c = 4,500 PSI
REINFORCING STEEL CLEAR COVER: 1 1/2" MINIMUM
REINFORCING STEEL STRENGTH: Fy = 60,000 PSI
LENGTHS GIVEN IN INCHES

BAR SIZE	LAP SPLICE LENGTH			DEVELOPMENT LENGTH		
	TOP BARS LST	OTHER BARS LSO	MIN. BAR SPAC	TOP BARS ELT	OTHER BARS ELO	MIN. BAR SPAC
3	16	16	2.3	12	12	1.9
4	19	16	3.0	14	12	2.5
5	24	19	3.8	18	14	3.2
6	28	23	4.5	21	17	3.8
7	46	36	4.8	35	27	3.9
8	58	45	5.0	44	34	4.0
9	71	55	5.3	54	42	4.2
10	86	67	5.6	66	51	4.3
11	103	80	5.9	79	61	4.5

CONCRETE STRENGTH: f'c = 4,500 PSI
REINFORCING STEEL CLEAR COVER: 2" MINIMUM
REINFORCING STEEL STRENGTH: Fy = 60,000 PSI
LENGTHS GIVEN IN INCHES

BAR SIZE	LAP SPLICE LENGTH			DEVELOPMENT LENGTH		
	TOP BARS LST	OTHER BARS LSO	MIN. BAR SPAC	TOP BARS ELT	OTHER BARS ELO	MIN. BAR SPAC
3	16	16	2.3	12	12	1.9
4	19	16	3.0	14	12	2.5
5	24	19	3.8	18	14	3.2
6	28	23	4.5	21	17	3.8
7	41	32	5.3	31	24	4.4
8	46	36	6.0	35	27	5.0
9	58	45	6.3	44	34	5.2
10	71	55	6.6	54	42	5.3
11	85	65	6.9	65	50	5.5

CONCRETE STRENGTH: f'c = 4,500 PSI
REINFORCING STEEL CLEAR COVER: 3" MINIMUM
REINFORCING STEEL STRENGTH: Fy = 60,000 PSI
LENGTHS GIVEN IN INCHES

BAR SIZE	LAP SPLICE LENGTH			DEVELOPMENT LENGTH		
	TOP BARS LST	OTHER BARS LSO	MIN. BAR SPAC	TOP BARS ELT	OTHER BARS ELO	MIN. BAR SPAC
3	16	16	2.3	12	12	1.9
4	19	16	3.0	14	12	2.5
5	24	19	3.8	18	14	3.2
6	28	23	4.5	21	17	3.8
7	41	32	5.3	31	24	4.4
8	46	36	6.0	35	27	5.0
9	52	41	6.8	40	31	5.7
10	59	46	7.7	45	35	6.4
11	65	50	8.5	50	38	7.1

HOLD FOR FINAL DESIGN

PRELIMINARY
NOT FOR CONSTRUCTION

NO	DATE	REVISIONS AND RECORD OF ISSUE	DRWN	REV'D	APPR	COMP
--						
--						
--						
--						
--						
--						
--						
A	02/28/2020	PRELIMINARY - ISSUED FOR BID	JB	NPR	-	S&L

SCALE:

PREP: MJD CHKD: NPR
APPD: - DATE: 02/28/2020

CONTRACTOR/INSTALLER SHALL TAKE ALL APPROPRIATE PRECAUTIONS TO ENSURE THE SAFETY OF ALL PEOPLE LOCATED ON THE WORK SITE; INCLUDING CONTRACTOR'S /INSTALLER'S PERSONNEL (OR THAT OF IT'S SUB-CONTRACTOR(S)) PERFORMING THE WORK.

ANY MODIFICATION OR ADDITION TO THIS DRAWING BY ANY ORGANIZATION OTHER THAN SARGENT & LUNDY IS NOT THE RESPONSIBILITY OF SARGENT & LUNDY.

Sargent & Lundy
55 EAST MONROE ST., CHICAGO, ILL.

NEXTera ENERGY TRANSMISSION NEW YORK

NEXTERA ENERGY TRANSMISSION NEW YORK, INC.
DYSINGER 345kV SWITCHYARD
CONCRETE GENERAL NOTES SH. 1

DYS-S1-0101

CONCRETE GENERAL NOTES SHEET 2

CONCRETE WORK (CONTINUED)

2.3 DETAILING, FABRICATION & CONSTRUCTION REQUIREMENTS

2.3.1 ALL CONCRETE AND CONCRETE WORK SHALL CONFOM TO THE LATEST REVISION OF ACI STANDARDS 301, 304, 306, 311, AND 318 & 350.

2.3.2 THE MINIMUM SPECIFIED COMPRESSIVE STRENGTH OF CONCRETE SHALL BE 4500psi UNLESS NOTED OTHERWISE. MAXIMUM W/CM RATIO SHALL NOT EXCEED 0.45.

2.3.3 CONCRETE: READY MIX CONCRETE SHALL CONFORM TO ASTM C94. AIR SHALL BE ADDED PER ASTM C260 TO PRODUCE FROM 6% ± 1.5% ENTRAINED AIR.

2.3.4 CEMENT: CEMENT SHALL CONFORM TO ASTM C150, LATEST VERSION, TYPE II.

2.3.5 AGGREGATE: THE NORMAL MAXIMUM SIZE FOR CONCRETE AGGREGATES SHALL BE THREE-QUARTERS (.75) INCHES.

2.3.6 ADMIXTURES: ADMIXTURES SHALL CONTAIN NO CHLORIDES, FLUORIDES OR NITRATES AND SHALL BE FORMULATED BY THE MANUFACTURER FOR THE JOB AREA WEATHER CONDITIONS TO CONTROL SETTING TIME. WATER REDUCING AND RETARDING ADMIXTURES, IF APPROVED BY THE CONSULTING ENGINEER OR CONSTRUCTION COORDINATOR, SHALL CONFORM TO ASTM C494, TYPE A OR D EXCEPT THAT CALCIUM CHLORIDE SHALL NOT BE USED.

2.3.7 NO WATER SHALL BE ADDED TO THE MIX AFTER INITIAL BATCHING WITHOUT THE WRITTEN APPROVAL OF THE CONSULTING ENGINEER OR CONSTRUCTION COORDINATOR.

2.3.8 ALL REINFORCING BARS SHALL CONFORM TO ASTM A615 GRADE 60 DEFORMED BARS UNLESS NOTED OTHERWISE.

2.3.9 ALL WELDED WIRE FABRIC SHALL CONFORM TO ASTM A185. ALL WELDED WIRE FABRIC SHALL BE LAPPED TWO PANELS AT EDGES AND ENDS AND TIED SECURELY.

2.3.10 ALL WELDING STUD ANCHORS SHALL BE COLD DRAWN STEEL CONFORMING TO ASTM A108 WITH A MINIMUM YIELD STRENGTH OF 50 ksi AND SHALL BE INSTALLED IN ACCORDANCE WITH MANUFACTURER'S GUIDELINES.

2.3.11 ALL LAP SPLICES FOR REINFORCING BARS #11 AND SMALLER SHALL BE AS INDICATED IN NOTE 2.2 AND SHALL BE STAGGERED UNLESS OTHERWISE APPROVED BY THE ENGINEER.

2.3.12 LAP SPLICES SHALL BE USED ONLY WHERE IT IS NOT PRACTICAL TO USE CONTINUOUS BARS.

2.3.13 PROVIDE A STANDARD 90° HOOK LENGTH AS INDICATED IN NOTE 2.2.3 WHEN STRAIGHT BAR DEVELOPMENT LENGTH IS NOT OBTAINABLE. THE Ldh DIMENSION SHALL BE ADJUSTED AS SHOWN ON DESIGN DRAWINGS SO THAT THE HOOK CAN BE TIED TO THE FAR FACE BARS UNLESS NOTED OTHERWISE.

2.3.14 THE MINIMUM CLEAR DISTANCE BETWEEN TWO PARALLEL BARS OR BETWEEN A PARALLEL BAR AND AN EMBEDDED CONDUIT OR PIPE SHALL NOT BE LESS THAN ONE BAR DIAMETER OR 1 1/3 TIMES THE MAXIMUM SIZE OF COARSE AGGREGATE OR 1" WHICHEVER IS THE GREATER.

2.3.15 WHERE PARALLEL REINFORCING BAR IS PLACED IN TWO OR MORE LAYERS, THE BARS IN THE UPPER LAYERS SHALL BE PLACED DIRECTLY ABOVE THOSE IN THE BOTTOM LAYER WITH CLEAR DISTANCE BETWEEN BARS NOT LESS THAN 1".

CONCRETE WORK (CONTINUED)

2.3.16 FOR MULTIPLE LAYERS OF PARALLEL REINFORCING BARS, THE CONTRACTOR SHALL FURNISH SPACER BARS AS REQUIRED TO SATISFY THE REQUIREMENTS OF NOTES 2.3.14 AND 2.3.15. REINFORCING BARS SHALL NOT BE BUNDLED UNLESS SPECIFICALLY NOTED ON THE DESIGN DRAWINGS.

2.3.17 ALL EXPOSED REINFORCING DOWELS FOR FUTURE EXTENSION SHALL BE PROTECTED FROM CORROSION. WHERE MECHANICAL SPLICES ARE TO BE USED, THE DOWELS SHALL EXTEND FROM THE FACE OF THE CONCRETE AN ADEQUATE LENGTH TO INSTALL THE MECHANICAL SPLICES PER THE MANUFACTURER'S GUIDELINES.

2.3.18 ALL EXPOSED PROJECTING CORNERS OF CONCRETE WORK SHALL BE BEVELED 1" UNLESS NOTED.

2.3.19 DRAWINGS INDICATING LOCATION OF CONSTRUCTION JOINTS REQUIRED IN ADDITION TO OR DIFFERENT FROM THOSE INDICATED ON THE DESIGN DRAWINGS SHALL BE SUBMITTED TO THE CONSULTING ENGINEER FOR REVIEW. THESE DRAWINGS SHALL BE SUBMITTED AND ACCEPTED BY THE CONSULTING ENGINEER BEFORE REBAR DETAILS ARE SUBMITTED FOR REVIEW. ALL CHANGES INCLUDING REQUIRED WATERSTOP, IF ANY, SHALL BE AT CONTRACTOR'S EXPENSE.

2.3.20 ALL CONSTRUCTION JOINTS SHALL BE ROUGHENED TO A MINIMUM AMPLITUDE OF 1/4" UNLESS NOTED OTHERWISE.

2.3.21 ALL CONSTRUCTION JOINTS SHALL BE THOROUGHLY CLEANED AND MOISTENED BEFORE PLACING FRESH CONCRETE.

2.3.22 AT ALL HORIZONTAL CONSTRUCTION JOINTS A 1" MINIMUM TO 3" MAXIMUM LAYER OF MORTAR OF THE SAME STRENGTH OR GREATER AS THAT OF THE ADJACENT CONCRETE SHALL BE PLACED ONTHE JOINT SURFACE IMMEDIATELY PRIOR TO PLACEMENT OF FRESH CONCRETE.

2.3.23 IT IS NOT A REQUIREMENT THAT THE WATERSTOP BE PLACED AT THE CENTERLINE OF THE STRUCTURAL ELEMENT. AT THE CONTRACTOR'S OPTION THE WATERSTOP MAY BE PLACED ANYWHERE BETWEEN THE CENTERLINE OF THE STRUCTURAL ELEMENT AND A POINT LOCATED A MINIMUM OF 2" FROM THE FACE OF THE REINFORCING BARS ON THE WATER SIDE OF THE JOINT.

2.3.24 DIMENSIONS OF EXISTING WORK SHALL BE FIELD VERIFIED BY THE CONTRACTOR PRIOR TO THE START OF WORK. DIMENSIONS NOTED FOR REFERENCE (REF) INDICATE NOMINAL DIMENSIONS FOR THE EXISTING STRUCTURE. THEY ARE SHOWN FOR INFORMATION ONLY.

2.3.25 THE FOLLOWING TYPES OF CONCRETE FINISH SHALL BE PROVIDED FOR THE SURFACES INDICATED UNLESS NOTED OTHERWISE. SEE ACI 301 AND THE APPLICABLE CONSTRUCTION SPECIFICATIONS FOR A DESCRIPTION OF THE SURFACE FINISH TYPES.

A. SCRATCHED FINISH – INTENTIONALLY ROUGHENED TO A FULL AMPLITUDE OF 1/4" – TOP OF AN INTERMEDIATE LIFT IN MULTILIFT POURS OF SLABS, WALLS, OR MATS (E.G., CONSTRUCTION JOINTS).

B. TROWELLED FINISH – FOR FLOORS AND THE TOP SURFACES OF CURBS, PIERS, AND PEDESTALS.

C. BROOM OR BELT FINISH – EQUIPMENT SLABS OR APRONS AT ENTRANCES TO BUILDINGS

2.3.26 SPECIAL CONCRETE FINISHES OTHER THAN THOSE SPECIFIED IN NOTE 2.3.25 ARE SPECIFIED ON THE PLAN DRAWINGS.

CONCRETE WORK (CONTINUED)

2.3.27 SLEEVE PENETRATIONS OR EMBEDDED PIPES SHALL BE ROTATED TO PROVIDE MAXIMUM SPACE BETWEEN THE FIN LUGS OF ADJACENT SLEEVES.

2.3.28 COLD JOINTS SHALL NOT BE PERMITTED.

2.3.29 ALL REINFORCING BARS SHALL BE CONTINUOUS ON OUTSIDE CORNERS OF WALLS OR CORNER BARS SHALL BE PROVIDED.

2.3.30 DOWELS FOR EQUIPMENT FOUNDATIONS AND CURBS SHALL BE A615 GRADE 60, UNLESS NOTED OTHERWISE.

2.3.31 ALL WATERSTOPS SHALL BE SPLICED TO FORM A CONTINUOUS WATERTIGHT SEAL. ALL WATERSTOPS SHALL BE SIKA GREENSTREAK PVC OR APPROVED EQUIVALENT.

2.3.32 NAIL HOLES SHALL BE PROVIDED FOR ALL EMBEDDED PLATES TO SECURE THEM TO FORMWORK. ALL NAIL HOLES SHALL BE INDICATED ON SHOP DRAWINGS.

2.3.33 CONTRACTOR SHALL NOT INSTALL CONCRETE EXPANSION ANCHORS OTHER THAN THOSE SPECIFICALLY INDICATED ON THE DESIGN DRAWINGS, WITHOUT THE APPROVAL OF THE CONSULTING ENGINEER.

2.3.34 ALL ALUMINUM SURFACES EMBEDDED IN OR IN CONTACT WITH CONCRETE SHALL BE COATED IN ACCORDANCE WITH ACI REQUIRMENTS.

2.3.35 WHERE CONCRETE SLAB IS INDICATED AS SLOPED (TO DRAIN) SPECIFIED CONCRETE THICKNESS SHALL BE MEASURED AT THE HIGH POINT. REINFORCING COVER REQUIREMENTS SHALL BE MAINTAINED AT THE LOW POINT OF CONCRETE.

2.3.36 PROVIDE SADDLES ON SLOPED FLOORS AT ALL EQUIPMENT PADS TO PREVENT WATER ACCUMULATION.

2.3.37 ANCHOR BOLTS WILL BE ASTM F1554 GRADE 36 UNLESS NOTED. AFTER FABRICATION HOT-DIP GALVANIZE, PER ASTM A153, THE PROJECTION PLUS 3" OF EACH ANCHOR

2.3.38 HORIZONTAL TOLERANCE FOR ANCHOR BOLT LOCATION TO BE ± 1/8".

2.3.39 HEATING AND WELDING OF REINFORCING STEEL IS NOT PERMITTED.

HOLD FOR FINAL DESIGN

PRELIMINARY
NOT FOR CONSTRUCTION

3.0 DRILLED PIER GENERAL NOTES

3.1 FOUNDATION INSTALLATION SHALL BE IN ACCORDANCE WITH THE DRILLED PIER GENERAL NOTES AND THE AMERICAN CONCRETE INSTITUTE (ACI) STANDARDS 315,318, LATEST EDITION.

3.2 THE BOTTOM OF ALL EXCAVATIONS SHALL BE CLEANED OF ALL LOOSE MATERIAL.

3.3 CONCRETE SHALL BE PLACED THE SAME DAY PIER HOLES ARE DRILLED.

3.4 CONCRETE SHALL BE PLACED IN SUCH A MANNER SO THAT IT DOES NOT STRIKE THE SIDES OF THE EXCAVATION OR REBAR AS IT IS PLACED.

3.5 ANY CASING USED SHALL BE REMOVED WHILE PLACING CONCRETE.

3.6 TOP SURFACE OF DRILLED FOUNDATION SHALL BE HAND STEEL TROWEL FINISHED AND SLOPED SLIGHTLY TO SHED WATER.

3.7 SET TIES SO THAT ENDS ARE DIRECTED INTO CONCRETE AND NOT TOWARD EXPOSED CONCRETE SURFACE.

3.8 PIERS THAT ARE LOCATED LESS THAN 3 PIER DIAMETERS APART, CENTER TO CENTER, SHALL NOT BE CONSTRUCTED ON THE SAME DAY. FOR PIERS OF DIFFERENT SIZES, THE LARGER PIER SHALL BE CONSTRUCTED FIRST.

3.9 WET SETTING OF ANCHORS IS NOT ALLOWED.

3.10 DRILLED PIER INSTALLATION/EXCAVATION SHALL BE MONITORED BY A REPRESENTATIVE OF EMPIRE GEOTECHNICAL ENGINEERING SERVICES (OR QUALIFIED EQUAL).

4.0 CONC. INSPECTION & TESTING NOTES

4.1 CONCRETE SHALL BE INSPECTED AND TESTED BY A CERTIFIED TECHNICIAN.

4.2 CONCRETE SHALL BE SAMPLED AND TESTED AT LEAST ONCE EVERY 100 CUBIC YARDS, BUT NOT LESS THAN ONCE PER DAY.

4.3 CONCRETE SHALL BE TESTED FOR TEMPERATURE, SLUMP, AIR CONTENT AND STRENGTH IN ACCORDANCE WITH THE APPLICABLE ACI AND ASTM STANDARDS.

4.4 SIX (6) CYLINDERS SHALL BE TAKEN AT EACH SAMPLE. TWO (2) SPECIMENS SHALL BE TESTED FOR STRENGTH AT 7 DAYS AND 28 DAYS. THE TWO (2) SPARE CYLINDERS SHALL BE USED ONLY WHEN AUTHORIZED BY THE OWNER OR OWNER'S REPRESENTATIVE.

5.0 SUBMITTAL NOTES

5.1 CONCRETE MIX DESIGNS SHALL BE PREPARED AND SUBMITTED FOR REVIEW IN ACCORDANCE WITH ACI STANDARDS.

5.2 SHOP DRAWINGS FOR REINFORCING STEEL SHALL BE PREPARED IN ACCORDANCE WITH ACI AND CRSI STANDARDS AND SUBMITTED FOR REVIEW.

5.3 SUBMITTALS SHALL BE SUBMITTED FOR REVIEW AT LEAST TWO (2) WEEKS PRIOR TO COMMENCEMENT OF THE WORK.

NO	DATE	REVISIONS AND RECORD OF ISSUE	DRWN	REV'D	APPR	COMP
--						
--						
--						
--						
--						
--						
--						
A	02/28/2020	PRELIMINARY - ISSUED FOR BID	JB	NPR	-	S&L

SCALE:

PREP: MJD CHKD: NPR
APPD: - DATE: 02/28/2020

CONTRACTOR/INSTALLER SHALL TAKE ALL APPROPRIATE PRECAUTIONS TO ENSURE THE SAFETY OF ALL PEOPLE LOCATED ON THE WORK SITE; INCLUDING CONTRACTOR'S /INSTALLER'S PERSONNEL (OR THAT OF IT'S SUB-CONTRACTOR(S)) PERFORMING THE WORK.

ANY MODIFICATION OR ADDITION TO THIS DRAWING BY ANY ORGANIZATION OTHER THAN SARGENT & LUNDY IS NOT THE RESPONSIBILITY OF SARGENT & LUNDY.

Sargent & Lundy
55 EAST MONROE ST., CHICAGO, ILL.

NEXTera ENERGY TRANSMISSION NEW YORK

NEXTERA ENERGY TRANSMISSION NEW YORK, INC.
DYSINGER 345kV SWITCHYARD
CONCRETE GENERAL NOTES SH. 2

DSY-S1-0102

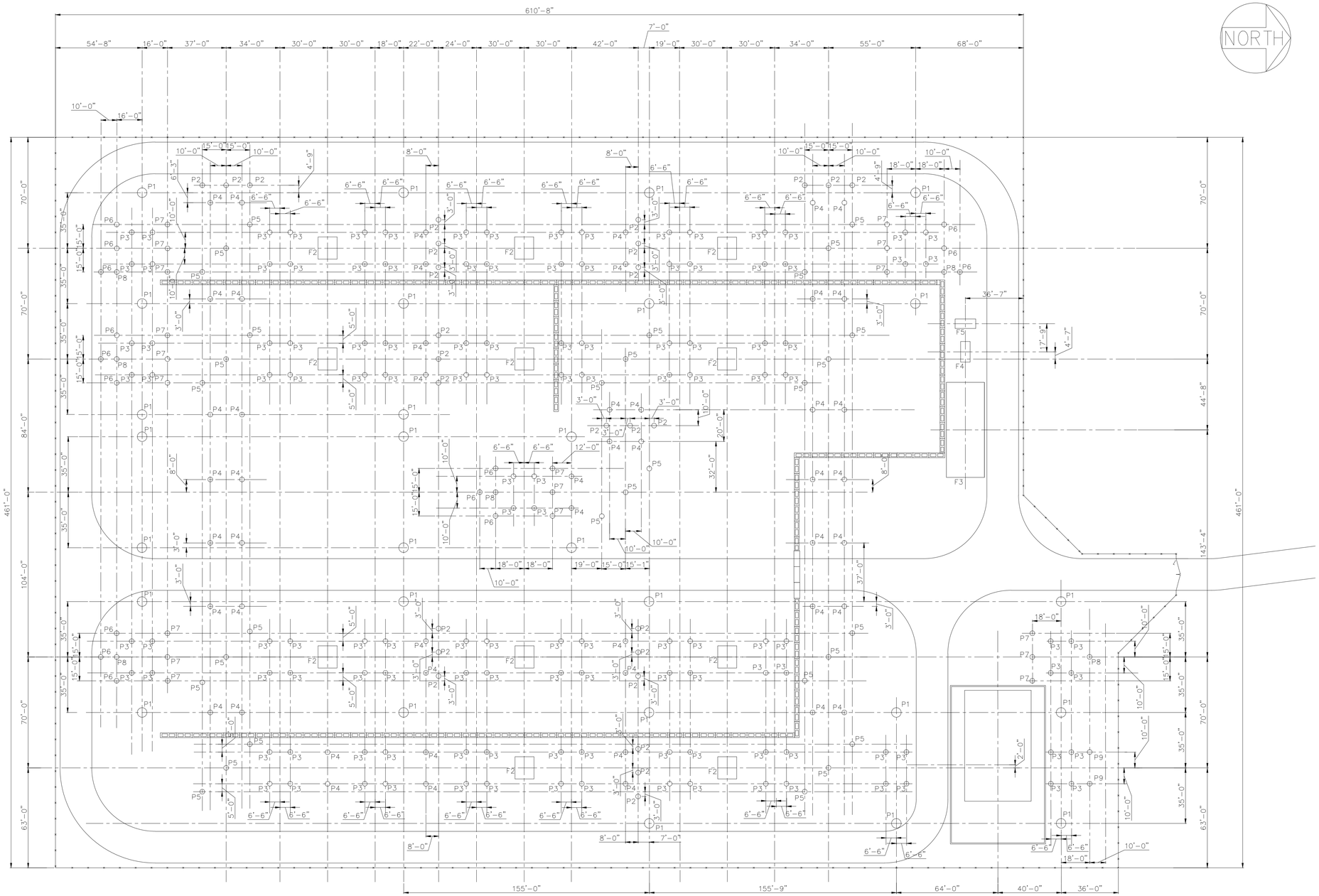

FOUNDATION IDENTIFICATION & REFERENCES			
IDENTIFICATION	TOTAL QUANTITY	DESCRIPTION	REFERENCE DRAWING
P1	28	345KV DEADEND	DYS-S1-0104
P2	27	345KV CCVT STAND	DYS-S1-0104
P3	128	345KV SWITCH STAND	DYS-S1-0104
P4	50	345KV BUS SUPPORT	DYS-S1-0104
P5	30	345KV ϕ1 BUS SUPPORT	DYS-S1-0104
P6	15	345KV SURGE ARRESTER	DYS-S1-0104
P7	18	345KV CT/PT STAND	DYS-S1-0104
P8	6	345KV CCVT & WAVE TRAP STAND	DYS-S1-0104
P9	2	345KV SURGE ARRESTER/CCVT STAND	DYS-S1-0104
F1	1	TRANSFORMER FOUNDATION AND OIL CONTAINMENT	DYS-S1-0105
F2	11	345KV BREAKER	DYS-S1-0106
F3	1	CONTROL BUILDING	DYS-S1-0107
F4	1	PROPANE GENERATOR	DYS-S1-0106
F5	1	PROPANE TANK	DYS-S1-0106

PRELIMINARY
FOR PERMIT ONLY

LEGEND

F000	FOUNDATION IDENTIFICATION
⊞ ⊕	ABOVE GRADE FOUNDATION
—×—×—×—	SUBSTATION FENCE

NOTES:

1. T/C EL. SHALL BE XXX UNLESS NOTED OTHERWISE.

REFERENCE DRAWING

DSY-E1-0100	ULTIMATE ELECTRICAL PLAN
DSY-E1-0145	GROUNDING PLAN
DSY-E1-0155	CONDUIT PLAN

NO	DATE	REVISIONS AND RECORD OF ISSUE	DRWN	REV'D	APPR	COMP
--						
--						
--						
--						
B	08/21/2020	PRELIMINARY RELEASE - ISSUED FOR PERMITS	SV/MJD	JGO/NPR	KVP	S&L
A	02/28/20	PRELIMINARY- ISSUED FOR BID	MJD	NPR	---	S&L

SCALE:
0 16FT 32FT 64FT
SCALE: 1/32"=1-0"

PREP: SV/MJD CHKD: JGO/NPR
APPD: KVP DATE: 08/21/2020

CONTRACTOR/INSTALLER SHALL TAKE ALL APPROPRIATE PRECAUTIONS TO ENSURE THE SAFETY OF ALL PEOPLE LOCATED ON THE WORK SITE; INCLUDING CONTRACTOR'S /INSTALLER'S PERSONNEL (OR THAT OF IT'S SUB-CONTRACTOR(S)) PERFORMING THE WORK.

ANY MODIFICATION OR ADDITION TO THIS DRAWING BY ANY ORGANIZATION OTHER THAN SARGENT & LUNDY IS NOT THE RESPONSIBILITY OF SARGENT & LUNDY.

Sargent & Lundy
55 EAST MONROE ST., CHICAGO, ILL.

NEXTera ENERGY
TRANSMISSION NEW YORK

NEXTERA ENERGY TRANSMISSION NEW YORK, INC
DYSINGER 345 KV SWITCHYARD
FOUNDATION PLAN

DSY-S1-0103

DRILLED PIER FOUNDATION SCHEDULE

FDN MARK NO.	STRUCTURE	CONCRETE		REINFORCING BARS				ANCHOR RODS							REMARKS
				VERTICAL		TIES									
		DIAMETER "D"	LENGTH "L"	QTY. PER FDN	SIZE "A"	QTY. PER FDN	SIZE "B"	SPACING "X"	SPACING "Y"	QTY. PER FDN	DIAMETER OR SIZE	LENGTH	PROJ.	DETAIL	
P1	345kV DEADEND	8'-0"	30'-0"	18	#8	18	#4	ANCHOR RODS PROVIDED BY xxxxx – SEE VENDOR DWG							
P2	345kV CCVT STAND	3'-0"	18'-0"	8	#8	13	#4	6"	6"	4	1 1/4"	51"	6"	1	
P3	345kV SWITCH STAND	3'-0"	18'-0"	8	#8	13	#4	6"	6"	4	1 1/4"	51"	6"	1	
P4	345kV BUS SUPPORT (HIGH OR LOW)	3'-0"	18'-0"	8	#8	13	#4	7"	7"	4	1 1/4"	51"	6"	1	
P5	345kV 1ø PHASE BUS SUPPORT	3'-0"	18'-0"	8	#8	13	#4	6"	6"	4	1 1/4"	51"	6"	1	
P6	345kV SURGE ARRESTOR STAND	3'-0"	18'-0"	8	#8	13	#4	7"	7"	4	1 1/4"	51"	6"	1	
P7	345kV CT/PT STAND	3'-0"	18'-0"	8	#8	13	#4	7"	7"	4	1 1/4"	51"	6"	1	
P8	345kV CCVT & WAVE TRAP STAND	3'-0"	18'-0"	8	#8	13	#4	6"	6"	4	1 1/4"	51"	6"	1	

SEE NOTE 6

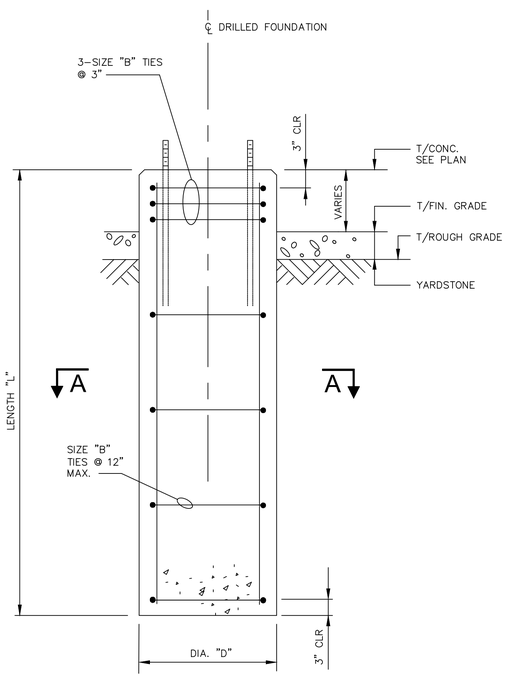

ELEVATION VIEW
TYPICAL DRILLED FOUNDATION
(SEE SCHEDULE)

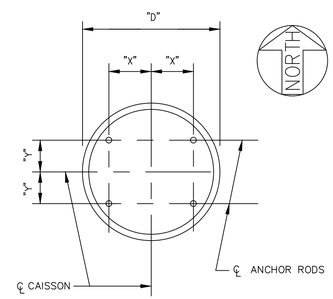

PLAN 1
TYPICAL DRILLED PIER FOUNDATION
(EXCEPT P1)

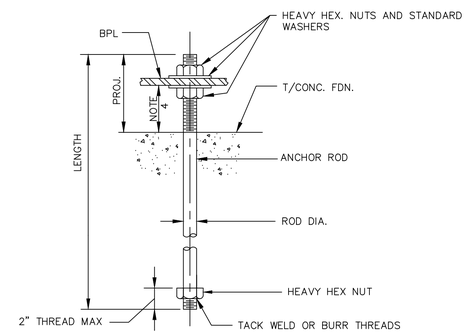

ANCHOR ROD DETAIL 1
F1554 GR 36 ANCHOR RODS

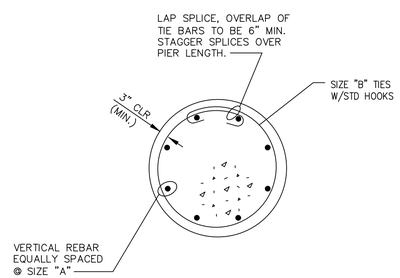

SECTION A–A

HOLD FOR FINAL DESIGN

PRELIMINARY
NOT FOR CONSTRUCTION

NOTES

1. ALL WORK ON THIS DRAWING SHALL BE FURNISHED AND INSTALLED IN ACCORDANCE WITH THE SCOPE OF WORK SPECIFICATION UNLESS NOTED.
2. FOR CONCRETE GENERAL NOTES AND DRILLED PIER NOTES SEE DRAWINGS DSY–S1–0101 AND DSY–S1–0102.
3. FOR FOUNDATION LOCATIONS AND TOP OF CONCRETE ELEVATIONS SEE DRAWING DSY–S1–0103.
4. THE STRUCTURE BASE PLATE SHALL BE PLACED AS CLOSE AS POSSIBLE TO THE TOP OF FOUNDATION. THE DISTANCE BETWEEN THE BOTTOM OF BASE PLATE AND TO OF CONCRETE SHALL NOT EXCEED TWO TIMES THE ANCHOR ROD DIAMETER.
5. INSTALL ANCHORS PER MANUFACTURER'S INSTRUCTIONS. SEE BUILDING MANUFACTURER DRAWINGS FOR ANCHOR CLIP AND AND INSTALLATION DETAILS.
6. PIER LENGTHS SHOWN ARE MINIMUM REQUIRED. PIERS SHALL EMBED AT LEAST 2'–0" INTO FIRM TO VERY COMPACT GLACIAL TILL. EXTEND PIER LENGTH AS REQUIRED.

NO	DATE	REVISIONS AND RECORD OF ISSUE	DRWN	REV'D	APPR	COMP
--						
--						
--						
--						
--						
--						
--						
A	02/28/2020	PRELIMINARY - ISSUED FOR BID	JB	NPR	-	S&L

SCALE: NONE

PREP: MJD CHKD: NPR
APPD: - DATE: 02/28/2020

CONTRACTOR/INSTALLER SHALL TAKE ALL APPROPRIATE PRECAUTIONS TO ENSURE THE SAFETY OF ALL PEOPLE LOCATED ON THE WORK SITE; INCLUDING CONTRACTOR'S /INSTALLER'S PERSONNEL (OR THAT OF IT'S SUB-CONTRACTOR(S)) PERFORMING THE WORK.

ANY MODIFICATION OR ADDITION TO THIS DRAWING BY ANY ORGANIZATION OTHER THAN SARGENT & LUNDY IS NOT THE RESPONSIBILITY OF SARGENT & LUNDY.

Sargent & Lundy
55 EAST MONROE ST., CHICAGO, ILL.

NEXTera ENERGY
TRANSMISSION NEW YORK

NEXTERA ENERGY TRANSMISSION NEW YORK, INC.
DYSINGER 345kV SWITCHYARD
DRILLED PIER FOUNDATIONS

DSY-S1-0104

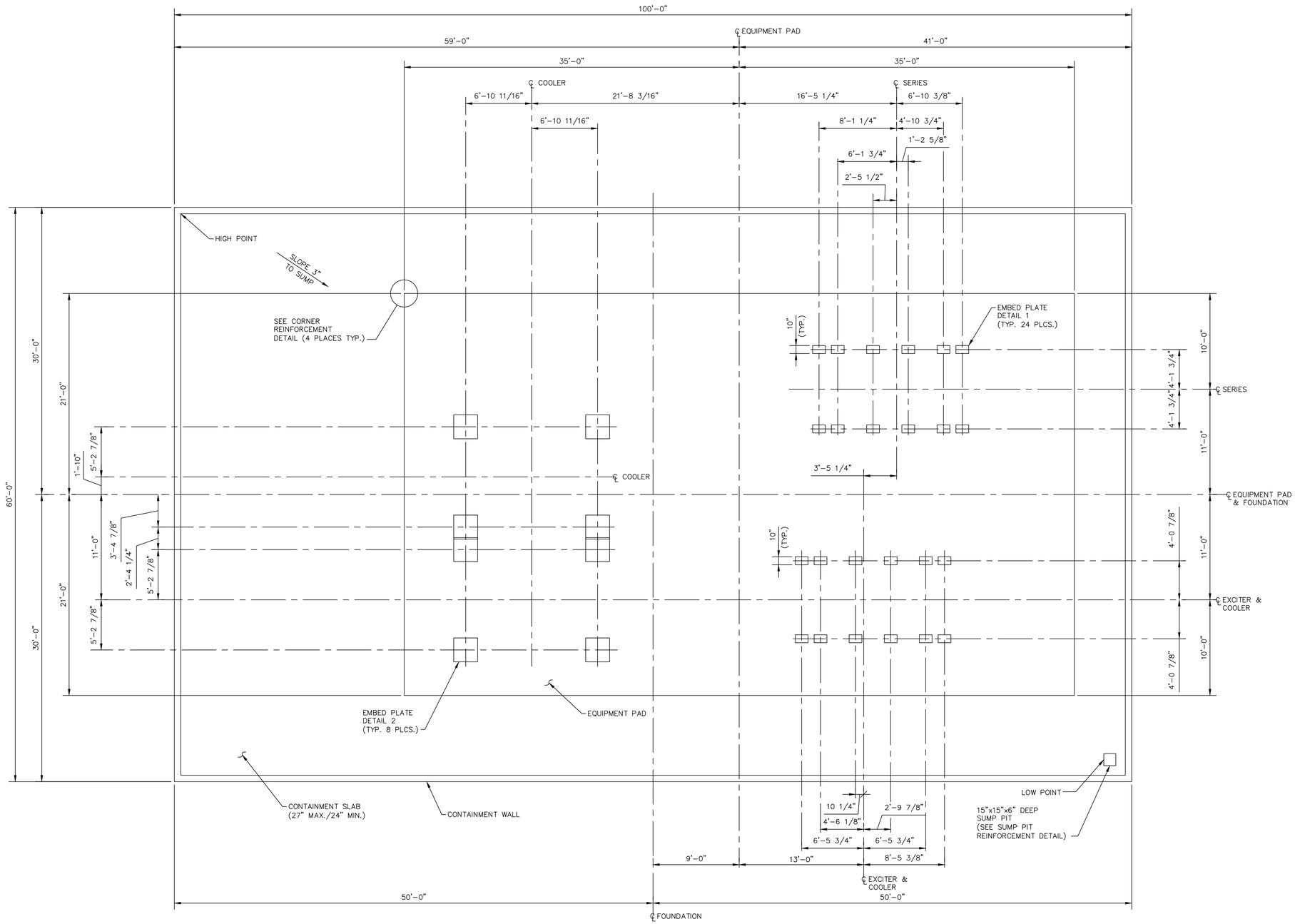

FOUNDATION F201 – GENERAL PLAN

NOTE: SEE PHYSICAL REFERENCE DRAWINGS FOR GROUNDING AND CONDUIT PENETRATIONS
SCALE: 3/16"=1'-0"

NORTH

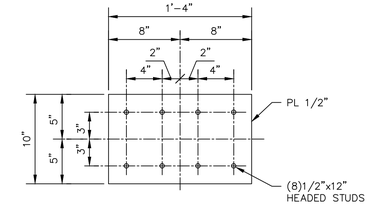

DETAIL 1

EMBED PLATE (SERIES OR EXCITER UNIT)
SCALE: 1 1/2"=1'-0"

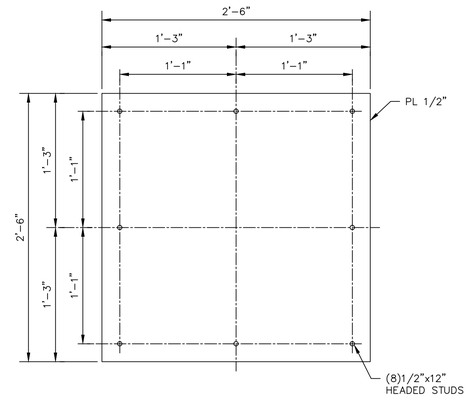

DETAIL 2

EMBED PLATE (COOLER UNITS)
SCALE: 1 1/2"=1'-0"

HOLD FOR FINAL DESIGN

PRELIMINARY
NOT FOR CONSTRUCTION

REFERENCE DRAWINGS

GROUNDING PLAN	DYS-E1-0145
GROUNDING DETAILS	DYS-E1-0150/0151
CONDUIT PLAN	DYS-E1-0155
CONDUIT DETAILS	DYS-E1-0160/0161

NOTES

1. ALL WORK ON THIS DRAWING SHALL BE FURNISHED AND INSTALLED IN ACCORDANCE WITH THE SCOPE OF WORK SPECIFICATION UNLESS NOTED.
2. FOR CONCRETE GENERAL NOTES SEE DRAWINGS DSY-S1-0101 AND DSY-S1-0102.
3. FOR FOUNDATION LOCATIONS SEE DRAWING DSY-S1-0103.
4. LOCKSTOP WATERSTOP W/PRIMER AS SUPPLIED BY GREENSTREAK (OR APPROVED EQUIVALENT).
5. FOUNDATION AND CONTAINMENT BASIN SHALL BE PLACED ON COMPACTED STRUCTURAL FILL. FILL SHALL CONSIST OF LEAN CLAY WITH A PLASTICITY INDEX OF 15 OR LESS AND LOW PERMEABILITY ($K=10^{-6}$ OR LESS). FILL SHALL BE PLACED AND TESTED IN ACCORDANCE WITH THE REQUIREMENTS OF THE GEOTECHNICAL REPORT.

NO	DATE	REVISIONS AND RECORD OF ISSUE	DRWN	REV'D	APPR	COMP
--						
--						
--						
--						
--						
--						
--						
A	02/28/2020	PRELIMINARY - ISSUED FOR BID	JB	NPR	-	S&L

SCALE: AS NOTED

PREP: MJD CHKD: NPR
APPD: - DATE: 02/28/2020

CONTRACTOR/INSTALLER SHALL TAKE ALL APPROPRIATE PRECAUTIONS TO ENSURE THE SAFETY OF ALL PEOPLE LOCATED ON THE WORK SITE; INCLUDING CONTRACTOR'S /INSTALLER'S PERSONNEL (OR THAT OF IT'S SUB-CONTRACTOR(S)) PERFORMING THE WORK.

ANY MODIFICATION OR ADDITION TO THIS DRAWING BY ANY ORGANIZATION OTHER THAN SARGENT & LUNDY IS NOT THE RESPONSIBILITY OF SARGENT & LUNDY.

Sargent & Lundy
55 EAST MONROE ST., CHICAGO, ILL.

NEXTera ENERGY TRANSMISSION NEW YORK

NEXTERA ENERGY TRANSMISSION NEW YORK, INC.
DYSINGER 345kV SWITCHYARD
PST FOUNDATION & OIL CONTAINMENT

DSY-S1-0105-1

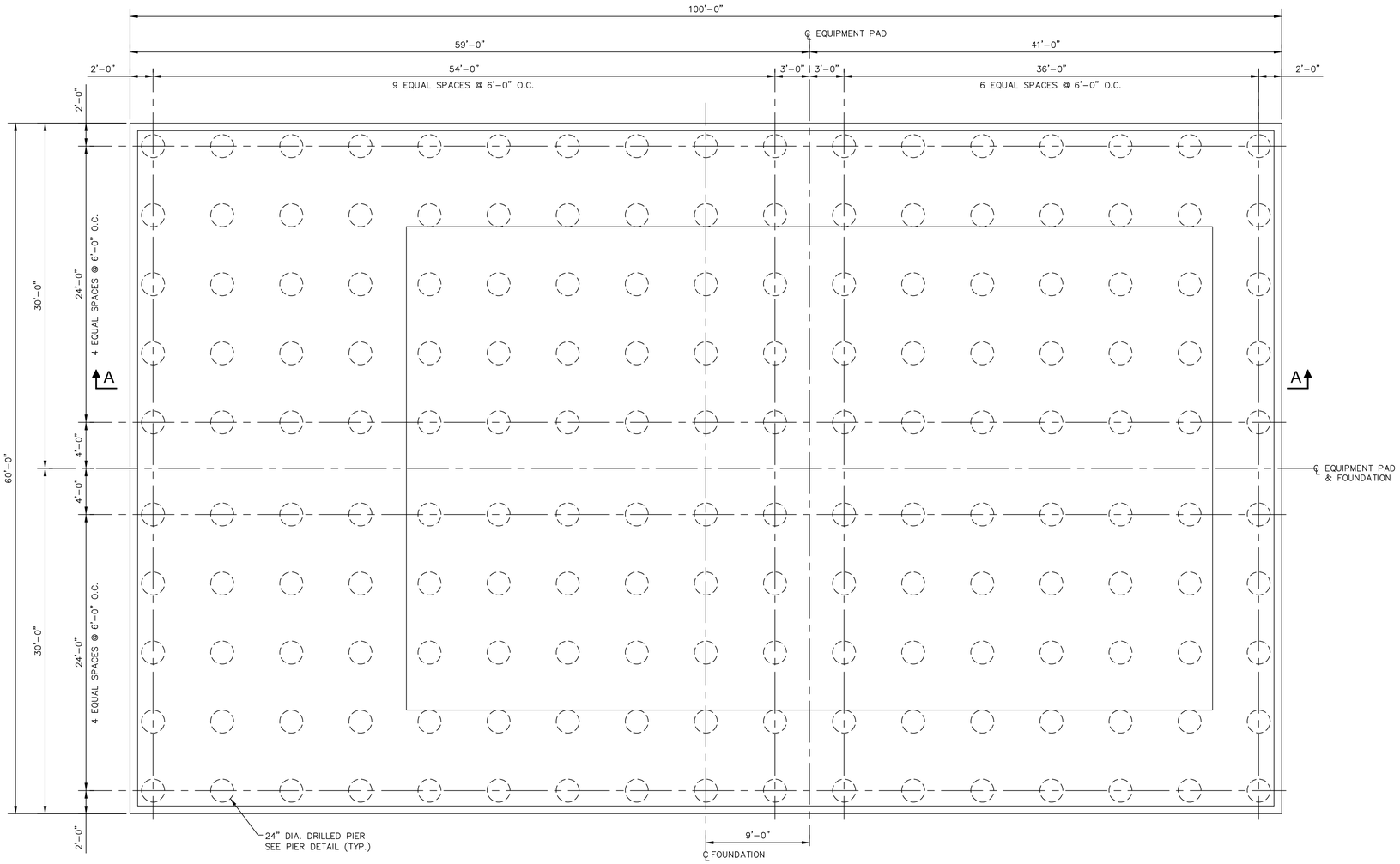

FOUNDATION F201 – DRILLED PIER PLAN

SCALE: 3/16"=1'-0"

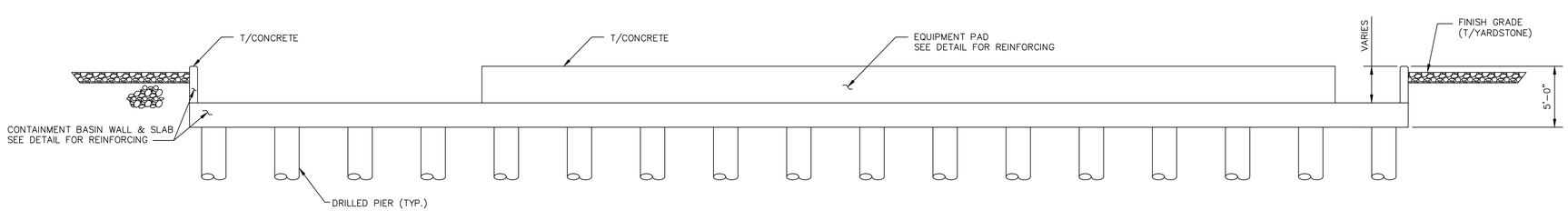

SECTION A–A

SCALE: 3/16"=1'-0"

HOLD FOR FINAL DESIGN

PRELIMINARY
NOT FOR CONSTRUCTION

NO	DATE	REVISIONS AND RECORD OF ISSUE	DRWN	REV'D	APPR	COMP
--						
--						
--						
--						
--						
--						
--						
A	02/28/2020	PRELIMINARY - ISSUED FOR BID	JB	NPR	-	S&L

SCALE: AS NOTED

PREP: MJD CHKD: NPR

APPD: - DATE: 02/28/2020

CONTRACTOR/INSTALLER SHALL TAKE ALL APPROPRIATE PRECAUTIONS TO ENSURE THE SAFETY OF ALL PEOPLE LOCATED ON THE WORK SITE; INCLUDING CONTRACTOR'S /INSTALLER'S PERSONNEL (OR THAT OF IT'S SUB-CONTRACTOR(S)) PERFORMING THE WORK.

ANY MODIFICATION OR ADDITION TO THIS DRAWING BY ANY ORGANIZATION OTHER THAN SARGENT & LUNDY IS NOT THE RESPONSIBILITY OF SARGENT & LUNDY.

Sargent & Lundy

55 EAST MONROE ST., CHICAGO, ILL.

NEXTera ENERGY TRANSMISSION NEW YORK

NEXTERA ENERGY TRANSMISSION NEW YORK, INC.
DYSINGER 345kV SWITCHYARD
PST FOUNDATION & OIL CONTAINMENT

DSY-S1-0105-2

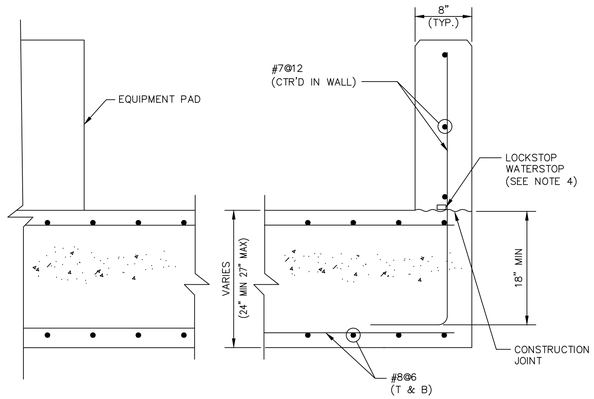

CONTAINMENT BASIN SLAB & WALL REINFORCEMENT DETAIL

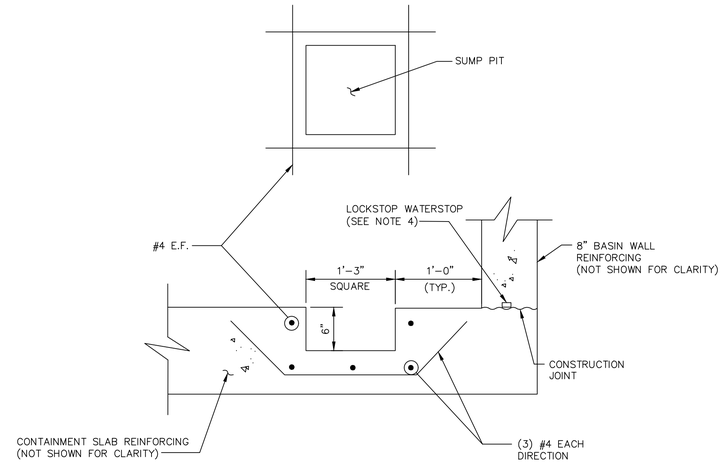

SUMP PIT REINFORCEMENT DETAIL

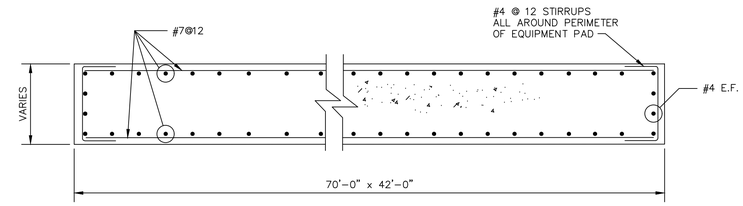

EQUIPMENT PAD REINFORCEMENT DETAIL

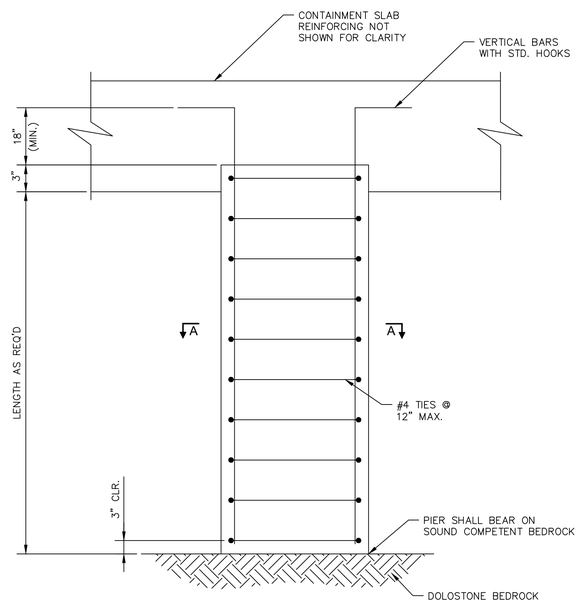

PIER DETAIL

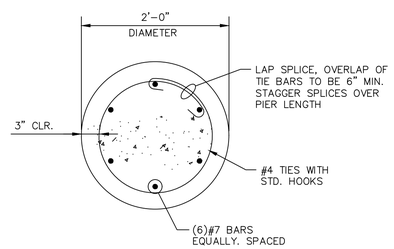

SECTION A–A

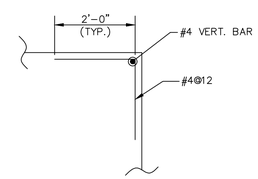

CORNER REINFORCEMENT DETAIL

HOLD FOR
FINAL DESIGN

PRELIMINARY
NOT FOR CONSTRUCTION

NO	DATE	REVISIONS AND RECORD OF ISSUE	DRWN	REV'D	APPR	COMP
--						
--						
--						
--						
--						
--						
--						
A	02/28/2020	PRELIMINARY - ISSUED FOR BID	JB	NPR	-	S&L

SCALE: NONE

PREP: MJD CHKD: NPR

APPD: - DATE: 02/28/2020

CONTRACTOR/INSTALLER SHALL TAKE ALL APPROPRIATE PRECAUTIONS TO ENSURE THE SAFETY OF ALL PEOPLE LOCATED ON THE WORK SITE; INCLUDING CONTRACTOR'S /INSTALLER'S PERSONNEL (OR THAT OF IT'S SUB-CONTRACTOR(S)) PERFORMING THE WORK.

ANY MODIFICATION OR ADDITION TO THIS DRAWING BY ANY ORGANIZATION OTHER THAN SARGENT & LUNDY IS NOT THE RESPONSIBILITY OF SARGENT & LUNDY.

Sargent & Lundy
55 EAST MONROE ST., CHICAGO, ILL.

NEXTera ENERGY
TRANSMISSION NEW YORK

NEXTERA ENERGY TRANSMISSION NEW YORK, INC.
DYSINGER 345kV SWITCHYARD
PST FOUNDATION & OIL CONTAINMENT

DSY-S1-0105-3

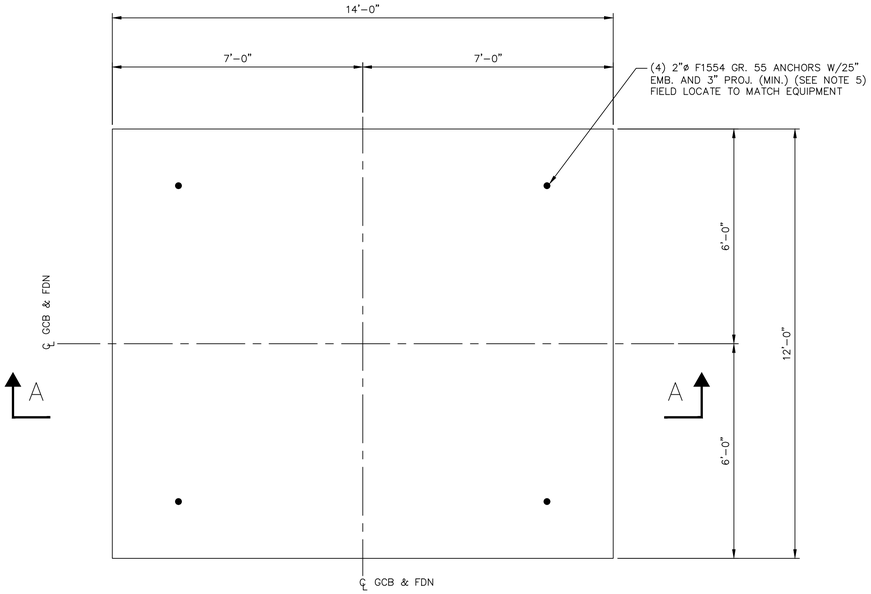

FOUNDATION F202 PLAN

345KV TR CIRCUIT BREAKER
SCALE: 1/2" = 1'-0"

NORTH

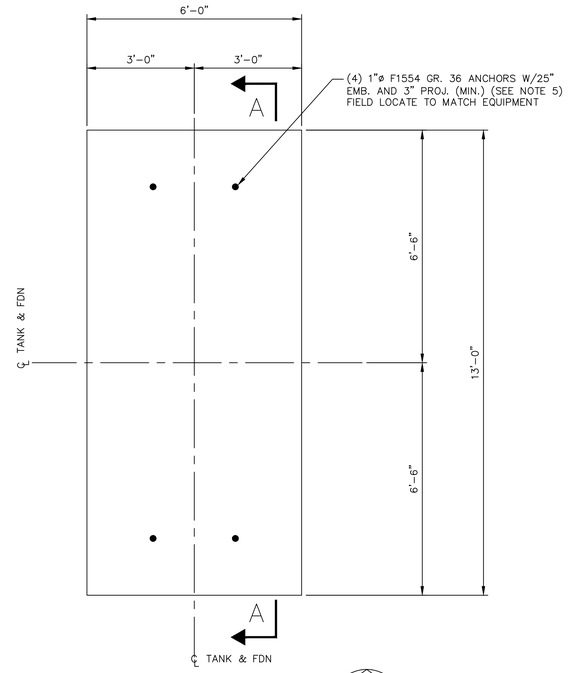

FOUNDATION F204 PLAN

PROPANE TANK
SCALE: 1/2" = 1'-0"

NORTH

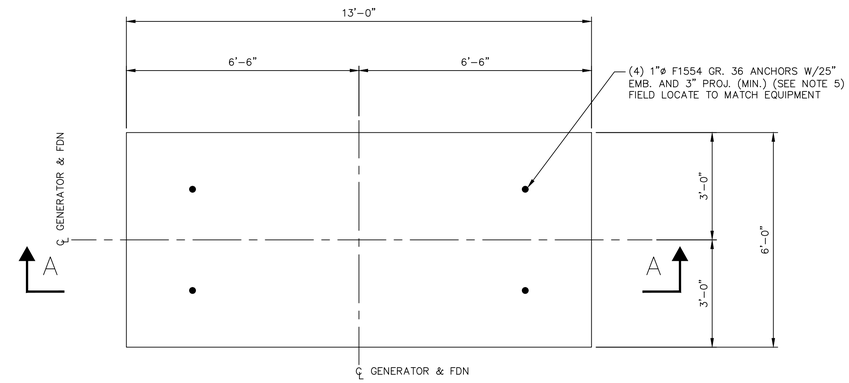

FOUNDATION F205 PLAN

PROPANE GENERATOR
SCALE: 1/2" = 1'-0"

NORTH

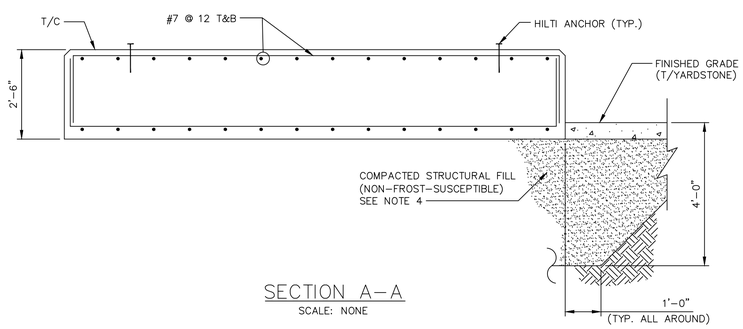

SECTION A-A

SCALE: NONE

REFERENCE DRAWINGS

GROUNDING PLAN	DSY-E1-0145
GROUNDING DETAILS	DSY-E1-0150/0151
CONDUIT PLAN	DSY-E1-0155
CONDUIT DETAILS	DSY-E1-0160/0161

HOLD FOR FINAL DESIGN

PRELIMINARY
NOT FOR CONSTRUCTION

NOTES

1. ALL WORK ON THIS DRAWING SHALL BE FURNISHED AND INSTALLED IN ACCORDANCE WITH THE SCOPE OF WORK SPECIFICATION UNLESS NOTED.
2. FOR CONCRETE GENERAL NOTES SEE DRAWINGS DSY-S1-0101 AND DSY-S1-0102.
3. FOR FOUNDATION LOCATIONS SEE DRAWING DSY-S1-0103.
4. FOUNDATION AND CONTAINMENT BASIN SHALL BE PLACED ON COMPACTED STRUCTURAL FILL (NON-FROST-SUSCEPTIBLE). INSTALL FILL IN LIFTS OF 8" (MAX) AND COMPACT TO 95% MODIFIED PROCTOR PER ASTM D1557. ALTERNATIVELY LEAN CONCRETE (1000 PSI MIN.) MAY BE USED STRUCTURAL FILL.
5. ANCHORS SHALL BE FULLY THREADED RODS INSTALLED USING HILTI HIT-RE 500 V3 ADHESIVE. INSTALL PER MANUFACTURER'S INSTRUCTIONS.
6. SEE PHYSICAL REFERENCE DRAWINGS FOR GROUNDING AND CONDUIT DETAILS.

NO	DATE	REVISIONS AND RECORD OF ISSUE	DRWN	REV'D	APPR	COMP
--						
--						
--						
--						
--						
--						
--						
A	02/28/2020	PRELIMINARY - ISSUED FOR BID	JB	NPR	-	S&L

SCALE: AS NOTED

PREP: MJD | CHKD: NPR
APPD: - | DATE: 02/28/2020

CONTRACTOR/INSTALLER SHALL TAKE ALL APPROPRIATE PRECAUTIONS TO ENSURE THE SAFETY OF ALL PEOPLE LOCATED ON THE WORK SITE; INCLUDING CONTRACTOR'S /INSTALLER'S PERSONNEL (OR THAT OF IT'S SUB-CONTRACTOR(S)) PERFORMING THE WORK.

ANY MODIFICATION OR ADDITION TO THIS DRAWING BY ANY ORGANIZATION OTHER THAN SARGENT & LUNDY IS NOT THE RESPONSIBILITY OF SARGENT & LUNDY.

Sargent & Lundy
55 EAST MONROE ST., CHICAGO, ILL.

NEXTera ENERGY TRANSMISSION NEW YORK

NEXTERA ENERGY TRANSMISSION NEW YORK, INC.
DYSINGER 345kV SWITCHYARD
SHALLOW FOUNDATIONS

DSY-S1-0106

STRUCTURAL STEEL GENERAL NOTES

1.0 GENERAL

1.1 ABBREVIATIONS AND DEFINITIONS

AB	=	ANCHOR BOLT
AR	=	ANCHOR ROD
BPL	=	BASE PLATE
BL	=	BEND LINE
BM	=	BEAM
BB	=	BACK TO BACK
BOTT	=	BOTTOM
BS	=	BEARING STIFFENER
B/	=	BOTTOM OF
℄	=	CENTERLINE
C TO C	=	CENTER TO CENTER
CHKD PL	=	CHECKERED PLATE
CEA	=	EXPANSION ANCHOR
CLR	=	CLEAR
COL	=	COLUMN
CONT	=	CONTINUOUS
DET	=	DETAIL
DIA	=	DIAMETER
ø	=	DIAMETER
DB	=	DIAGONAL BRACING
DWG	=	DRAWING
EL	=	ELEVATION
FDN	=	FOUNDATION
FL	=	FLOOR
FS	=	FAR SIDE
Fy	=	YIELD STRESS
GALV	=	GALVANIZED
GPL	=	GUARD PLATE
GRTG	=	GRATING
HB	=	HORIZONTAL BRACING
HP	=	HIGH POINT
HR	=	HANDRAIL
HSS	=	HOLLOW STRUCTURAL STEEL
ID	=	INSIDE DIAMETER
IS	=	INTERMEDIATE STIFFENER
ISL	=	INSTANDING LEG
IP	=	IN PLACE
KB	=	KNEE BRACE
LLH	=	LONG LEG HORIZONTAL FOR UNEQUAL LEG ANGLE SECTION
LLV	=	LONG LEG VERTICAL FOR UNEQUAL LEG ANGLE SECTION
LG	=	LENGTH, LONG
LL	=	LIVE LOAD
LP	=	LOW POINT
MAX	=	MAXIMUM
MC	=	MOMENT CONNECTION
MIN	=	MINIMUM
NS	=	NEAR SIDE
NTS	=	NOT TO SCALE
OC	=	ON CENTER
OD	=	OUTSIDE DIAMETER
OSL	=	OUTSTANDING LEG
PL	=	PLATE
PROJ	=	ANCHOR ROD PROJECTION ABOVE ROUGH CONCRETE
PT	=	POINT OF TANGENCY
R	=	RADIUS
REF	=	REFERENCE
REM	=	REMOVABLE
REQD	=	REQUIRED
SECT	=	SECTION
SS	=	STAINLESS STEEL
SYMM	=	SYMMETRICAL
T & B	=	TOP AND BOTTOM
T/	=	TOP OF
T/C	=	TOP OF CONCRETE
T/G	=	TOP OF GRATING
T/S	=	TOP OF STEEL
TYP	=	TYPICAL
UN	=	UNLESS NOTED
VB	=	VERTICAL BRACING
WP	=	WORK POINT

GENERAL (CONTINUED)

1.2 SYMBOLS

SLOPE → = INDICATES DIRECTION OF DOWNWARD SLOPE.

= INDICATES DIRECTION OF BAR GRATING SPAN.

= INDICATES CHECKERED PLATE.

2⊨ = INDICATES TWO ANGLES WITH HORIZONTAL LEGS BACK TO BACK

2⊤ = INDICATED TWO ANGLES WITH VERTICAL LEGS BACK TO BACK

1.3 DESIGNATIONS

1.3.1 NOT USED

1.4 MATERIALS

UNLESS NOTED, ALL STEEL MATERIALS SHALL BE AS FOLLOWS:

- WIDE FLANGE SHAPES SHALL BE ASTM A992
- ALL ROLLED SHAPES EXCEPT WIDE FLANGE SHALL BE ASTM A36.
- PLATE WORK SHALL BE ASTM A36.
- ROUND HOLLOW STRUCTURAL SECTIONS (HSS) SHALL BE ASTM A500, GRADE B.
- RECTANGULAR HOLLOW STRUCTURAL SECTIONS (HSS) SHALL BE ASTM A500, GRADE B.
- STEEL PIPE SHALL BE ASTM A53, GRADE B.

1.5 STRUCTURAL DESIGN DATA

1.5.1 STRUCTURAL DESIGN IS BASED ON THE APPLICABLE REQUIREMENTS OF THE LATEST EDITION OF THE INTERNATIONAL BUILDING CODE

1.5.2 UNLESS NOTED OTHERWISE, STRUCTURES ARE DESIGNED FOR THE LOADS LISTED IN NOTES 1.5.3 THROUGH 1.5.5.

1.5.3 FLOOR LOADING – NOT APPLICABLE

1.5.4 ENVIRONMENTAL LOADING (NESC 2017 AND ASCE 7–10)

A. NESC HEAVY: 4–PSF WIND WITH 1/2" RADIAL ICE AT 0 DEG F

B. CONCURRENT ICE & WIND: 40–MPH WIND WITH 1" RADIAL ICE AT 15 DEG F (EXPOSURE C)

C. EXTREME WIND: 120–MPH WIND WITH 0" RADIAL ICE AT 60 DEG F (EXPOSURE C)

D. SEISMIC: DESIGN GROUND ACCELERATION AT 60 DEG F (NO WIND OR ICE)

SPECTRAL RESPONSE ACCELERATIONS

S_S = 0.204

S_1 = 0.061

SITE CLASS D

1.5.5 EQUIPMENT LOADS – SEE THE DESIGN DRAWING FOR THE INDIVIDUAL STRUCTURE (IF APPLICABLE)

2.0 STRUCTURAL STEEL

2.1 DETAILING, FABRICATION AND ERECTION REQUIREMENTS

2.1.1 ALL DETAILS AND WORKMANSHIP SHALL BE DONE IN ACCORDANCE WITH THE LATEST EDITION OF AISC "MANUAL OF STEEL CONSTRUCTION" AND "CODE OF STANDARD PRACTICE".

2.1.2 ALL BOLT HOLES SHALL BE 11/16"ø UNLESS NOTED.

2.1.3 ALL BOLTS SHALL BE 5/8"ø H.H. CONFORMING TO THE STANDARDS OF ASTM A325 WITH SUITABLE H.H. NUTS CONFORMING TO THE STANDARDS OF ASTM A563 (UNLESS NOTED). ALL BOLTS SHALL BE INSTALLED AS SNUG TIGHT UNLESS NOTED OTHERWISE. INSTALLATION AND INSPECTION OF BOLTED JOINTS SHALL BE IN ACCORDANCE WITH AISC AND RCSC STANDARDS.

2.1.4 ALL MATERIAL SHALL BE HOT–DIP GALVANIZED AFTER ALL FABRICATION AND WELDING IS COMPLETE AND BEFORE BOLTING PIECES TOGETHER. GALVANIZING SHALL BE DONE IN ACCORDANCE WITH THE STANDARDS OF ASTM A123, LATEST EDITION, FOR BOTH FABRICATED AND UNFABRICATED STEEL PRODUCTS AND IN ACCORDANCE WITH THE STANDARD OF ASTM A153, LATEST EDITION, FOR HARDWARE. ALL NUTS SHALL BE TAPPED OUT OVER PRIOR TO GALVANIZATION, THEN TAPPED TO CLEAN THREADS AFTER GALVANIZATION IN ACCORDANCE WITH ASTM A563, LATEST EDITION, ALL TAPPED HOLES SHALL BE RETAPPED AFTER GALVANIZING, ALL FIELD WELDS AND GALVANIZED SURFACES DAMAGED DURING ERECTION SHALL BE COATED WITH INORGANIC ZINC COATING.

2.1.5 WELDING SHALL BE PERFORMED WITH E70XX ELECTRODES, SHALL BE PERFORMED BY CERTIFIED / QUALIFIED WELDERS AND SHALL BE IN ACCORDANCE WITH AWS D1.1 "STRUCTURAL WELDING CODE–STEEL" LATEST EDITION. INSPECTION OF WELDS SHALL BE IN ACCORDANCE WITH AWS SPECIFICATION.

2.1.6 WELD SIZES NOT SHOWN ON THE DRAWING SHALL CONFORM TO THE THICKNESS OF ADJOINING STEEL TO MEET THE MINIMUM WELD SIZE PER AWS SPECIFICATION.

2.1.7 WELD SIZES SHOWN ON DRAWINGS ARE MINIMUM DESIGN SIZES AND SHALL BE INCREASED ACCORDING TO THE THICKNESS OF ADJOINING STEEL TO MEET THE MINIMUM WELD SIZE PER AWS SPECIFICATIONS.

2.1.8 COMPLETE PENETRATION WELDS SHALL BE PROVIDED FOR ALL GROOVE WELDING UNLESS OTHERWISE SPECIFICALLY INDICATED.

2.1.9 STEEL COLUMN ANCHOR RODS SHALL BE TIGHTENED WITH 1/4 OF A FULL TURN AFTER SNUG TIGHT.

2.1.10 DIMENSIONS OF EXISTING WORK SHALL BE FIELD VERIFIED BY THE CONTRACTOR PRIOR TO THE START OF WORK IN ACCORDANCE WITH THE SPECIFICATION. DIMENSIONS NOTED FOR REFERENCE (REF) INDICATE NOMINAL DIMENSIONS FOR THE EXISTING STRUCTURE. NEW WORK SHALL NOT BE LOCATED BASED ON THE REFERENCED DIMENSIONS.

2.1.11 WHILE PERFORMING MODIFICATION OR RELOCATION OF EXISTING STEEL, THE ERECTOR SHALL BE RESPONSIBLE FOR TEMPORARY SHORING AND BRACING TO ENSURE THE STRUCTURAL INTEGRITY DURING THE CONSTRUCTION PROCESS.

2.1.12 DAMAGE TO PAINT OR GALVANIZED SURFACES SHALL BE REPAIRED IMMEDIATELY AFTER WELDING IS COMPLETED.

HOLD FOR FINAL DESIGN

PRELIMINARY
NOT FOR CONSTRUCTION

NO	DATE	REVISIONS AND RECORD OF ISSUE	DRWN	REV'D	APPR	COMP
--						
--						
--						
--						
--						
--						
--						
A	02/28/2020	PRELIMINARY - ISSUED FOR BID	JB	NPR	-	S&L

SCALE:

PREP: MJD CHKD: NPR

APPD: - DATE: 02/28/2020

CONTRACTOR/INSTALLER SHALL TAKE ALL APPROPRIATE PRECAUTIONS TO ENSURE THE SAFETY OF ALL PEOPLE LOCATED ON THE WORK SITE; INCLUDING CONTRACTOR'S /INSTALLER'S PERSONNEL (OR THAT OF IT'S SUB-CONTRACTOR(S)) PERFORMING THE WORK.

ANY MODIFICATION OR ADDITION TO THIS DRAWING BY ANY ORGANIZATION OTHER THAN SARGENT & LUNDY IS NOT THE RESPONSIBILITY OF SARGENT & LUNDY.

Sargent & Lundy
55 EAST MONROE ST., CHICAGO, ILL.

NEXTera ENERGY TRANSMISSION NEW YORK

NEXTERA ENERGY TRANSMISSION NEW YORK, INC.
DYSINGER 345kV SWITCHYARD
STRUCTURAL STEEL GENERAL NOTES

DSY-S1-0110

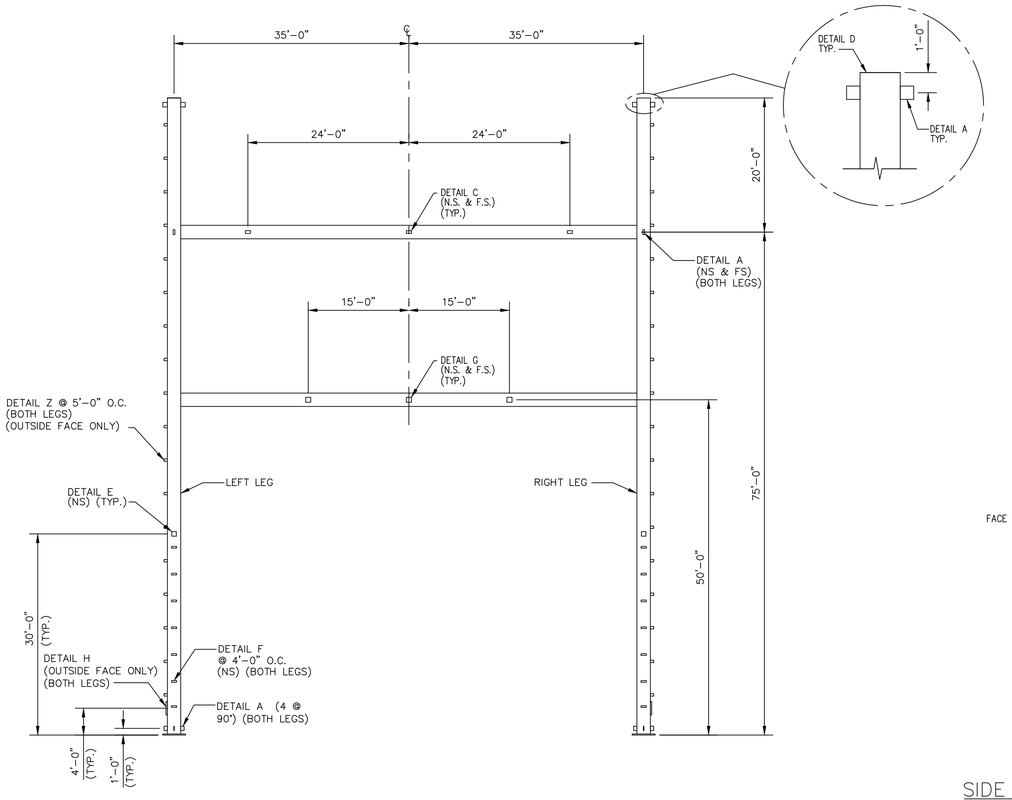

FRONT ELEVATION (FACE X)

SCALE 3/32"=1'-0"

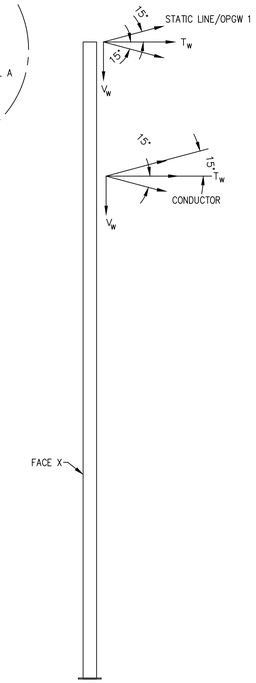

SIDE ELEVATION

SCALE 3/32"=1'-0"

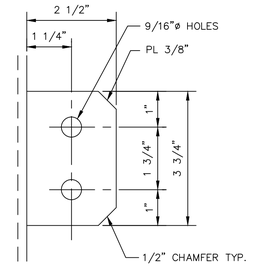

DETAIL A

GROUNDING LUG

SCALE: 6"=1'-0"

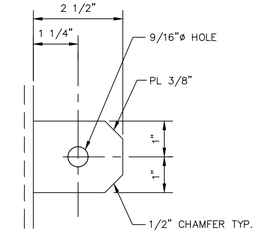

DETAIL B

GROUNDING LUG

SCALE: 6"=1'-0"

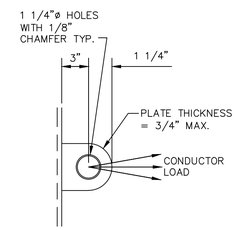

DETAIL C

CONDUCTOR LUG

SCALE: NONE

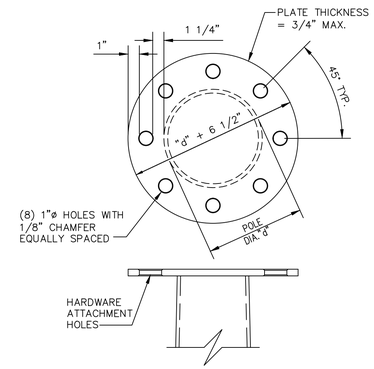

DETAIL D

STATIC LINE LUG

SCALE: NONE

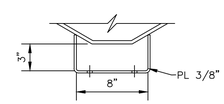

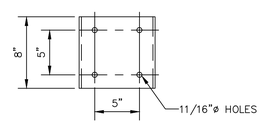

DETAIL E

LIGHT MOUNTING

SCALE: 1 1/2"=1'-0"

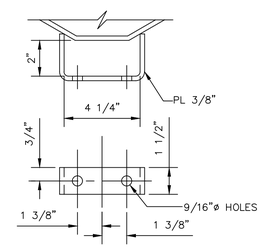

DETAIL F

CONDUIT SUPPORT

SCALE: 3"=1'-0"

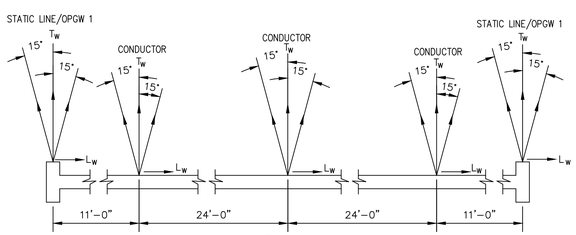

PLAN

SCALE: NONE

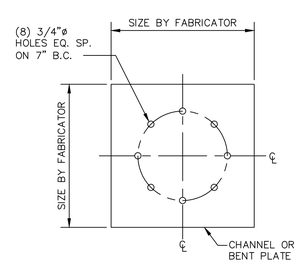

DETAIL G

INSULATOR MOUNTING SUPPORT

SCALE: NONE

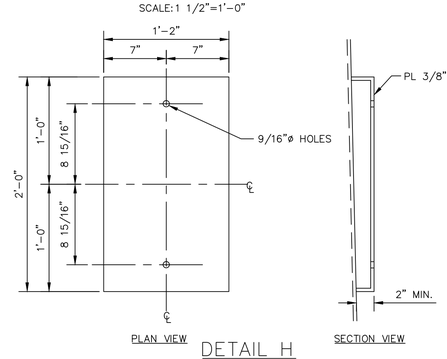

DETAIL H

OPGW SPLICE BOX SUPPORT

SCALE: 1 1/2"=1'-0"

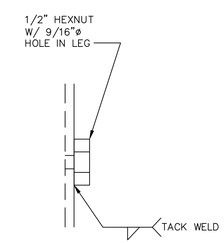

DETAIL Z

OPGW LUG

SCALE: NONE

(7 REQUIRED)

LOAD TABLE (TRANSMISSION)

LOAD	CONDUCTOR			STATIC LINE/OPGW		
	L_W	T_W	V_W	L_W	T_W	V_W
NESC HEAVY	700	14500	2500	500	6000	400
EXTREME WIND	1100	9100	1800	600	4600	400
CONCURRENT WIND / ICE	800	16000	3100	600	6700	400

WIND SHAPE FACTOR TABLE

SHAPE		6 TO 10 SIDES	12 OR MORE SIDES
SHAPE FACTOR	2.0	1.4	1.0

LOAD TABLE (INSULATOR)

LOAD	P_D	P_I	H_W	M_W
NESC HEAVY	400	100	100	200
EXTREME WIND	400	0	200	800
CONCURRENT WIND/ICE	400	200	100	200

NOTE: INSULATOR LOADS SHALL BE APPLIED AT DETAIL G

DESIGN NOTES

1. STRUCTURE IS SHOWN SCHEMATICALLY. ALL WORK ON THIS DRAWING SHALL BE DESIGNED AND FURNISHED BY FABRICATOR.
2. ALL ANCHOR BOLTS SHALL BE DESIGNED AND FURNISHED BY FABRICATOR. ASSUME 3000 PSI CONCRETE AND 3" COVER.
3. ALL CONDUCTOR, STATIC LINE, AND EQUIPMENT LOADS SPECIFIED IN THE LOAD TABLE ARE IN POUNDS AND POUND-FEET.
4. THE WIND PRESSURE LOADS SPECIFIED DO NOT INCLUDE SHAPE FACTORS. WIND PRESSURES SHALL BE MULTIPLIED BY THE APPROPRIATE SHAPE FACTOR (SEE WIND SHAPE FACTOR TABLE), AND THEN APPLIED TO THE STRUCTURE .
5. THE DEAD LOADS IN THE TABLE DO NOT INCLUDE DEAD WEIGHT OF THE STRUCTURE. THE STRUCTURE DEAD WEIGHT SHALL BE SUPPLIED BY THE FABRICATOR.
6. IN ADDITION TO LOADS SPECIFIED IN THE LOAD TABLE, STRUCTURES SHALL BE DESIGNED FOR A 0.30 KIP VERTICAL POINT LOAD AT ANY POSITION ON THE STRUCTURE.
7. STRUCTURES SHALL BE DESIGNED FOR SECONDARY MOMENTS FROM NON-LINEAR P-DELTA EFFECTS & FOR AN ASSUMED ROTATION OF 1.0 DEGREE AT THE BASE.
8. UNFACTORED FOUNDATION LOADS SHALL BE PROVIDED BY FABRICATOR.
9. COLUMNS MAY BE TAPERED OR NON-TAPERED SECTIONS.
10. ALL STRUCTURE HEIGHTS SHALL BE MEASURED FROM BOTTOM OF BASE PLATE.
11. STRUCTURE DEFLECTIONS SHALL BE CHECKED FOR ALL LOADING COMBINATIONS WITH ALL LOAD FACTORS EQUAL TO 1.0. THE CALCULATED DEFLECTIONS SHALL NOT EXCEED:
    - HORIZONTAL DEFLECTION OF VERTICAL MEMBERS 1/100 OF HEIGHT
    - HORIZONTAL DEFLECTION OF HORIZONTAL MEMBERS 1/200 OF SPAN
    - VERTICAL DEFLECTION OF HORIZONTAL MEMBERS 1/200 OF SPAN
12. DESIGN LOAD COMBINATIONS:

    LOAD COMBINATION 1 (NESC HEAVY)
    $1.1\ D + 1.2W_I + 1.65\ T_W + 2.5\ L_W + 1.5\ V_W + 1.1P_D + 1.2P_I + 1.2(H_W + M_W)$

    LOAD COMBINATION 2 (EXTREME WIND)
    $1.1\ D + 1.2\ W + 1.0\ T_W + 1.0\ L_W + 1.0\ V_W + 1.1P_D + 1.2(H_W + M_W)$

    LOAD COMBINATION 3 (CONCURRENT WIND / ICE)
    $1.1\ D + 1.2\ W_I + 1.0\ T_W + 1.0\ L_W + 1.0\ V_W + 1.1P_D + 1.2P_I + 1.2(H_W + M_W)$

    WHERE:
    - W = WIND ON STRUCTURE (25 PSF)
    - W_I = WIND W/ICE ON STRUCTURE (NESC HEAVY = 4 PSF & CONC. WIND/ ICE = 5 PSF)
    - D = DEAD WEIGHT OF STRUCTURE
    - L_W = LATERAL LOAD FROM WIRES (TRANSMISSION)
    - T_W = TENSION OF WIRES (TRANSMISSION)
    - V_W = VERTICAL LOAD OF WIRES (TRANSMISSION)
    - P_D = DEAD LOAD OF ARRESTERS
    - P_I = ICE LOAD ON ARRESTERS
    - H_W = WIND LOAD AT ARRESTER BASE
    - M_W = OVERTURNING MOMENT AT ARRESTER BASE DUE TO WIND

FABRICATION NOTES

1. SEE DESIGN NOTES FOR DETAILED DESIGN REQUIREMENTS.
2. ALL STEEL SHALL BE HOT-DIP GALVANIZED. SAFEGUARDS SHALL BE USED TO PREVENT WARPAGE, BENDING, AND EMBRITTLEMENT.
3. ALL WORK SHALL BE IN ACCORDANCE WITH AISC CODE OF STANDARD PRACTICE AND AWS D1.1.
4. MATERIAL CERTIFICATIONS SHALL BE SUBMITTED PRIOR TO FABRICATION.
5. WELDING INSPECTION AND WELDING INSPECTOR SHALL BE IN ACCORDANCE WITH AWS D1.1.
6. BASE PLATES SHALL BE TESTED FOR 100% OF THE VOLUME.

HOLD FOR FINAL DESIGN

PRELIMINARY
NOT FOR CONSTRUCTION

NO	DATE	REVISIONS AND RECORD OF ISSUE	DRWN	REV'D	APPR	COMP
--						
--						
--						
--						
--						
--						
--						
A	02/28/2020	PRELIMINARY - ISSUED FOR BID	JB	NPR	-	S&L

SCALE:

PREP: MJD CHKD: NPR

APPD: - DATE: 02/28/2020

CONTRACTOR/INSTALLER SHALL TAKE ALL APPROPRIATE PRECAUTIONS TO ENSURE THE SAFETY OF ALL PEOPLE LOCATED ON THE WORK SITE; INCLUDING CONTRACTOR'S /INSTALLER'S PERSONNEL (OR THAT OF IT'S SUB-CONTRACTOR(S)) PERFORMING THE WORK.

ANY MODIFICATION OR ADDITION TO THIS DRAWING BY ANY ORGANIZATION OTHER THAN SARGENT & LUNDY IS NOT THE RESPONSIBILITY OF SARGENT & LUNDY.

Sargent & Lundy
55 EAST MONROE ST., CHICAGO, ILL.

NEXTera ENERGY
TRANSMISSION NEW YORK

NEXTERA ENERGY TRANSMISSION NEW YORK, INC.
DYSINGER 345kV SWITCHYARD
345kV SINGLE BAY DEADEND LOAD TREE

DSY-S1-0111

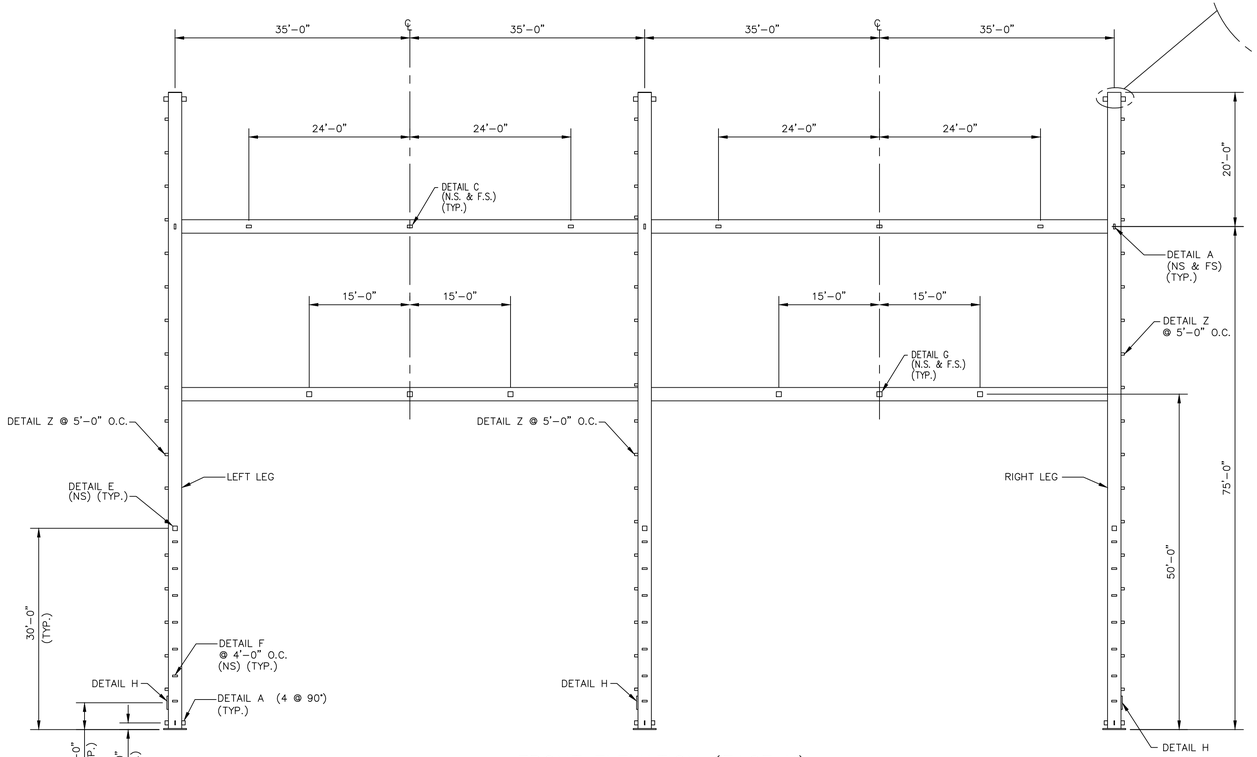

FRONT ELEVATION (FACE X)

SCALE 3/32"=1'-0"

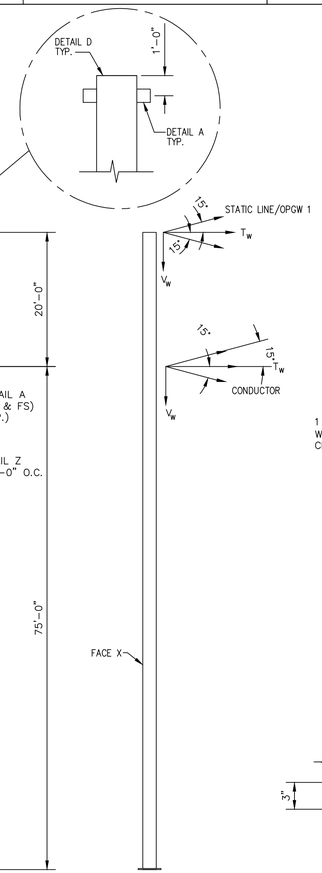

SIDE ELEVATION

SCALE 3/32"=1'-0"

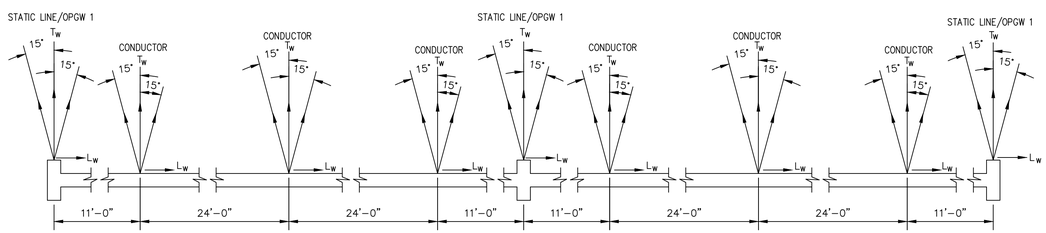

PLAN

SCALE: NONE

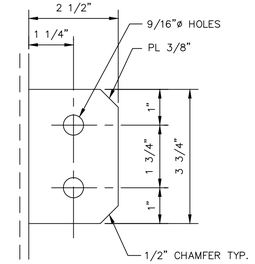

DETAIL A

GROUNDING LUG

SCALE: 6"=1'-0"

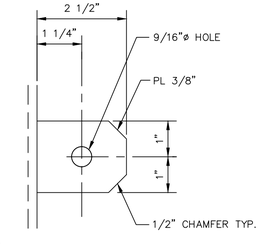

DETAIL B

GROUNDING LUG

SCALE: 6"=1'-0"

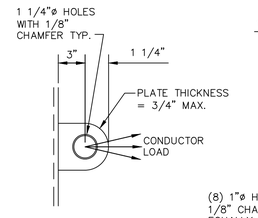

DETAIL C

CONDUCTOR LUG

SCALE: NONE

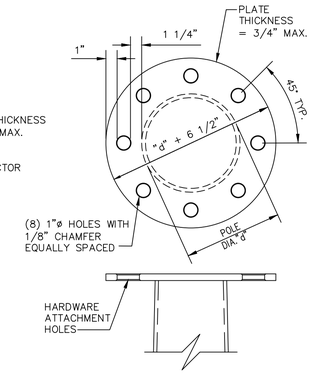

DETAIL D

STATIC LINE LUG

SCALE: NONE

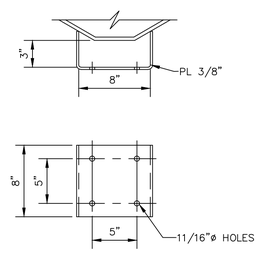

DETAIL E

LIGHT MOUNTING

SCALE: 1 1/2"=1'-0"

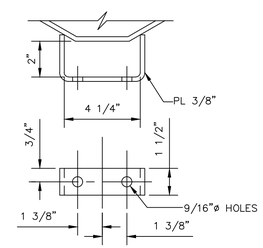

DETAIL F

CONDUIT SUPPORT

SCALE: 3"=1'-0"

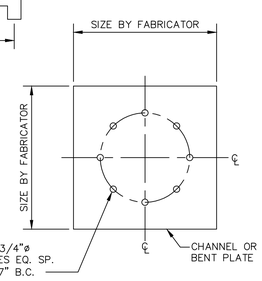

DETAIL G

INSULATOR MOUNTING SUPPORT

SCALE: NONE

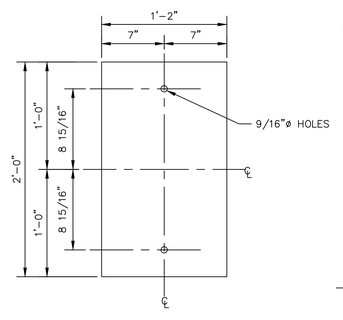

DETAIL H

OPGW SPLICE BOX SUPPORT

SCALE: 1 1/2"=1'-0"

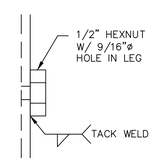

DETAIL Z

OPGW LUG

SCALE: NONE

LOAD TABLE (TRANSMISSION)

LOAD	CONDUCTOR			STATIC LINE/OPGW		
	L_W	T_W	V_W	L_W	T_W	V_W
NESC HEAVY	700	14500	2500	500	6000	400
EXTREME WIND	1100	9100	1800	600	4600	400
CONCURRENT WIND / ICE	800	16000	3100	600	6700	400

WIND SHAPE FACTOR TABLE

SHAPE		6 TO 10 SIDES	12 OR MORE SIDES
SHAPE FACTOR	2.0	1.4	1.0

LOAD TABLE (INSULATOR)

LOAD	P_D	P_I	H_W	M_W
NESC HEAVY	400	100	100	200
EXTREME WIND	400	0	200	800
CONCURRENT WIND/ICE	400	200	100	200

NOTE: INSULATOR LOADS SHALL BE APPLIED AT DETAIL G

DESIGN NOTES

1. STRUCTURE IS SHOWN SCHEMATICALLY. ALL WORK ON THIS DRAWING SHALL BE DESIGNED AND FURNISHED BY FABRICATOR.
2. ALL ANCHOR BOLTS SHALL BE DESIGNED AND FURNISHED BY FABRICATOR. ASSUME 3000 PSI CONCRETE AND 3" COVER.
3. ALL CONDUCTOR, STATIC LINE, AND EQUIPMENT LOADS SPECIFIED IN THE LOAD TABLE ARE IN POUNDS AND POUND-FEET.
4. THE WIND PRESSURE LOADS SPECIFIED DO NOT INCLUDE SHAPE FACTORS. WIND PRESSURES SHALL BE MULTIPLIED BY THE APPROPRIATE SHAPE FACTOR (SEE WIND SHAPE FACTOR TABLE), AND THEN APPLIED TO THE STRUCTURE .
5. THE DEAD LOADS IN THE TABLE DO NOT INCLUDE DEAD WEIGHT OF THE STRUCTURE. THE STRUCTURE DEAD WEIGHT SHALL BE SUPPLIED BY THE FABRICATOR.
6. IN ADDITION TO LOADS SPECIFIED IN THE LOAD TABLE, STRUCTURES SHALL BE DESIGNED FOR A 0.30 KIP VERTICAL POINT LOAD AT ANY POSITION ON THE STRUCTURE.
7. STRUCTURES SHALL BE DESIGNED FOR SECONDARY MOMENTS FROM NON-LINEAR P-DELTA EFFECTS & FOR AN ASSUMED ROTATION OF 1.0 DEGREE AT THE BASE.
8. UNFACTORED FOUNDATION LOADS SHALL BE PROVIDED BY FABRICATOR.
9. COLUMNS MAY BE TAPERED OR NON-TAPERED SECTIONS.
10. ALL STRUCTURE HEIGHTS SHALL BE MEASURED FROM BOTTOM OF BASE PLATE.
11. STRUCTURE DEFLECTIONS SHALL BE CHECKED FOR ALL LOADING COMBINATIONS WITH ALL LOAD FACTORS EQUAL TO 1.0. THE CALCULATED DEFLECTIONS SHALL NOT EXCEED:
    HORIZONTAL DEFLECTION OF VERTICAL MEMBERS 1/100 OF HEIGHT
    HORIZONTAL DEFLECTION OF HORIZONTAL MEMBERS 1/200 OF SPAN
    VERTICAL DEFLECTION OF HORIZONTAL MEMBERS 1/200 OF SPAN
12. DESIGN LOAD COMBINATIONS:

    LOAD COMBINATION 1 (NESC HEAVY)
    $1.1\ D + 1.2W_i + 1.65\ T_W + 2.5\ L_W + 1.5\ V_W + 1.1P_D + 1.2P_I + 1.2(H_W + M_W)$

    LOAD COMBINATION 2 (EXTREME WIND)
    $1.1\ D + 1.2\ W + 1.0\ T_W + 1.0\ L_W + 1.0\ V_W + 1.1P_D + 1.2(H_W + M_W)$

    LOAD COMBINATION 3 (CONCURRENT WIND / ICE)
    $1.1\ D + 1.2\ W_i + 1.0\ T_W + 1.0\ L_W + 1.0\ V_W + 1.1P_D + 1.2P_I + 1.2(H_W + M_W)$

    WHERE:
    W = WIND ON STRUCTURE (25 PSF)
    Wi = WIND W/ICE ON STRUCTURE (NESC HEAVY = 4 PSF & CONC. WIND/ ICE = 5 PSF)
    D = DEAD WEIGHT OF STRUCTURE
    L_W = LATERAL LOAD FROM WIRES (TRANSMISSION)
    T_W = TENSION OF WIRES (TRANSMISSION)
    V_W = VERTICAL LOAD OF WIRES (TRANSMISSION)
    P_D = DEAD LOAD OF ARRESTERS
    P_I = ICE LOAD ON ARRESTERS
    H_W = WIND LOAD AT ARRESTER BASE
    M_W = OVERTURNING MOMENT AT ARRESTER BASE DUE TO WIND

FABRICATION NOTES

1. SEE DESIGN NOTES FOR DETAILED DESIGN REQUIREMENTS.
2. ALL STEEL SHALL BE HOT-DIP GALVANIZED. SAFEGUARDS SHALL BE USED TO PREVENT WARPAGE, BENDING, AND EMBRITTLEMENT.
3. ALL WORK SHALL BE IN ACCORDANCE WITH AISC CODE OF STANDARD PRACTICE AND AWS D1.1.
4. MATERIAL CERTIFICATIONS SHALL BE SUBMITTED PRIOR TO FABRICATION.
5. WELDING INSPECTION AND WELDING INSPECTOR SHALL BE IN ACCORDANCE WITH AWS D1.1.
6. BASE PLATES SHALL BE TESTED FOR 100% OF THE VOLUME.

HOLD FOR FINAL DESIGN

PRELIMINARY
NOT FOR CONSTRUCTION

(3 REQUIRED)

NO	DATE	REVISIONS AND RECORD OF ISSUE	DRWN	REV'D	APPR	COMP
--						
--						
--						
--						
--						
--						
--						
A	02/28/2020	PRELIMINARY - ISSUED FOR BID	JB	NPR	-	S&L

SCALE:

PREP: MJD | CHKD: NPR
APPD: - | DATE: 02/28/2020

CONTRACTOR/INSTALLER SHALL TAKE ALL APPROPRIATE PRECAUTIONS TO ENSURE THE SAFETY OF ALL PEOPLE LOCATED ON THE WORK SITE; INCLUDING CONTRACTOR'S /INSTALLER'S PERSONNEL (OR THAT OF IT'S SUB-CONTRACTOR(S)) PERFORMING THE WORK.

ANY MODIFICATION OR ADDITION TO THIS DRAWING BY ANY ORGANIZATION OTHER THAN SARGENT & LUNDY IS NOT THE RESPONSIBILITY OF SARGENT & LUNDY.

Sargent & Lundy
55 EAST MONROE ST., CHICAGO, ILL.

NEXTera ENERGY
TRANSMISSION NEW YORK

NEXTERA ENERGY TRANSMISSION NEW YORK, INC.
DYSINGER 345kV SWITCHYARD
345kV TWO BAY DEADEND LOAD TREE

DSY-S1-0112

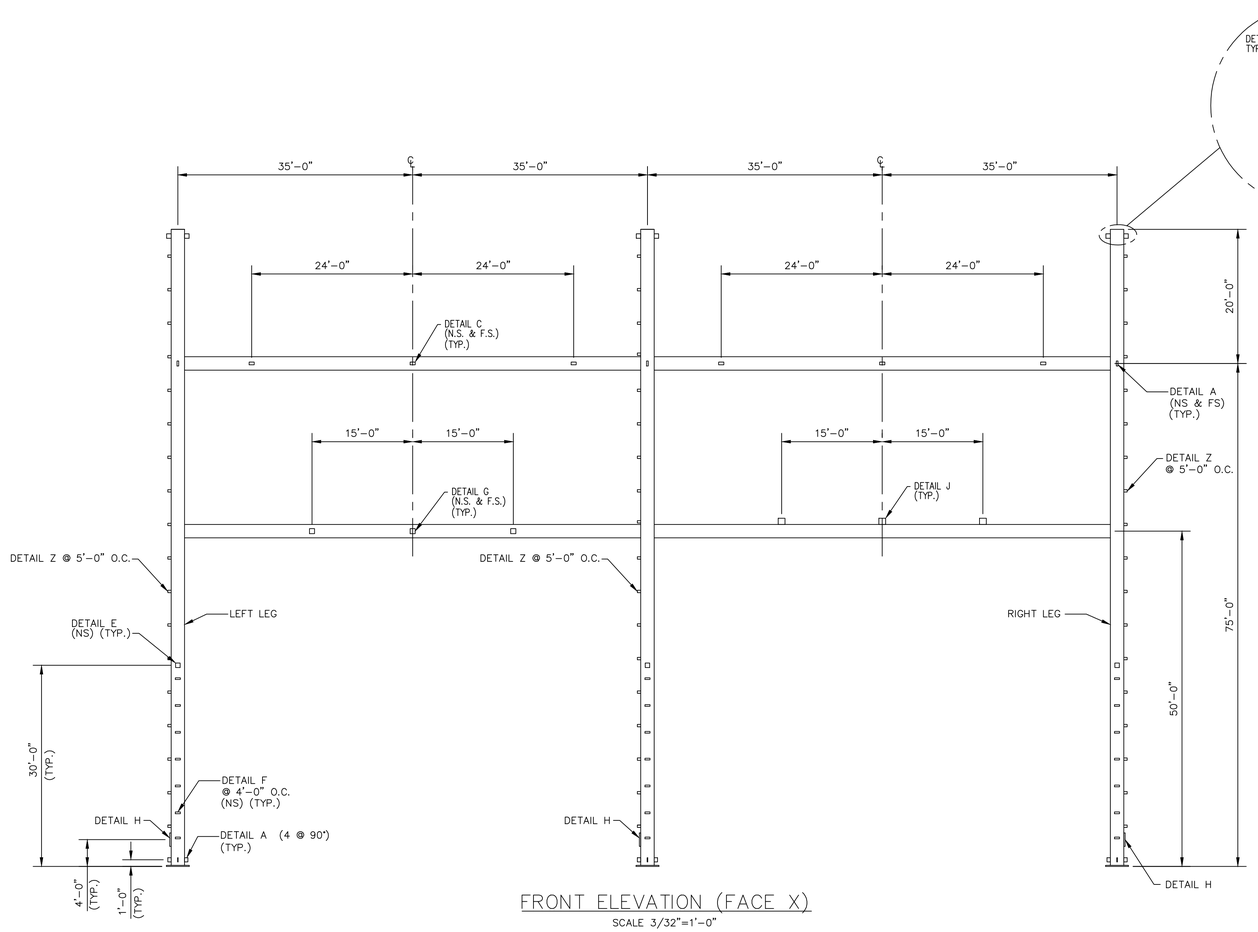

FRONT ELEVATION (FACE X)

SCALE 3/32"=1'-0"

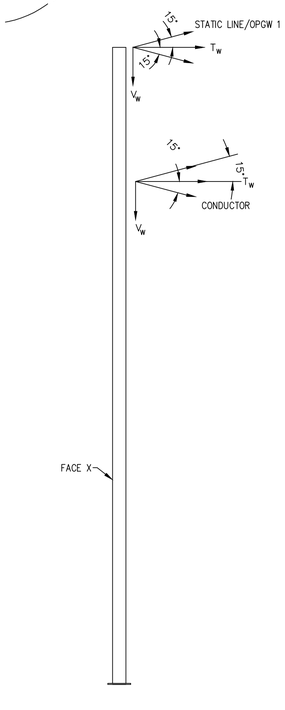

SIDE ELEVATION

SCALE 3/32"=1'-0"

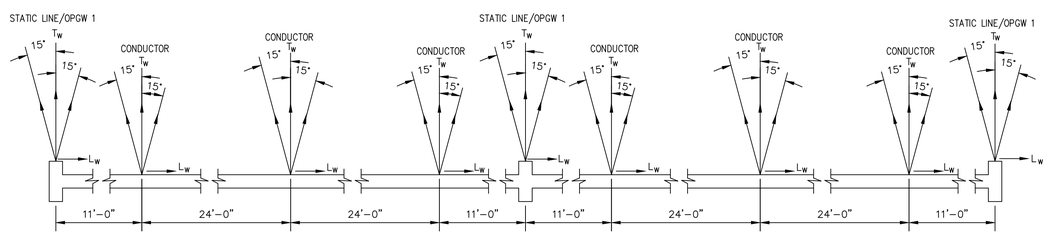

PLAN

SCALE: NONE

LOAD TABLE (TRANSMISSION)						
LOAD	CONDUCTOR			STATIC LINE/OPGW		
	L_W	T_W	V_W	L_W	T_W	V_W
NESC HEAVY	700	14500	2500	500	6000	400
EXTREME WIND	1100	9100	1800	600	4600	400
CONCURRENT WIND / ICE	800	16000	3100	600	6700	400

WIND SHAPE FACTOR TABLE			
SHAPE		6 TO 10 SIDES	12 OR MORE SIDES
SHAPE FACTOR	2.0	1.4	1.0

LOAD TABLE (INSULATOR)				
LOAD	P_D	P_I	H_W	M_W
NESC HEAVY	400	100	100	200
EXTREME WIND	400	0	200	800
CONCURRENT WIND/ICE	400	200	100	200

NOTE: INSULATOR LOADS SHALL BE APPLIED AT DETAIL G

LOAD TABLE (V-SWITCH)				
LOAD	P_D	P_I	H_W	M_W
NESC HEAVY	1200	300	300	600
EXTREME WIND	1200	0	600	2400
CONCURRENT WIND/ICE	1200	600	300	600

NOTE: INSULATOR LOADS SHALL BE APPLIED AT DETAIL J

DESIGN NOTES

1. STRUCTURE IS SHOWN SCHEMATICALLY. ALL WORK ON THIS DRAWING SHALL BE DESIGNED AND FURNISHED BY FABRICATOR.
2. ALL ANCHOR BOLTS SHALL BE DESIGNED AND FURNISHED BY FABRICATOR. ASSUME 3000 PSI CONCRETE AND 3" COVER.
3. ALL CONDUCTOR, STATIC LINE, AND EQUIPMENT LOADS SPECIFIED IN THE LOAD TABLE ARE IN POUNDS AND POUND-FEET.
4. THE WIND PRESSURE LOADS SPECIFIED DO NOT INCLUDE SHAPE FACTORS. WIND PRESSURES SHALL BE MULTIPLIED BY THE APPROPRIATE SHAPE FACTOR (SEE WIND SHAPE FACTOR TABLE), AND THEN APPLIED TO THE STRUCTURE .
5. THE DEAD LOADS IN THE TABLE DO NOT INCLUDE DEAD WEIGHT OF THE STRUCTURE. THE STRUCTURE DEAD WEIGHT SHALL BE SUPPLIED BY THE FABRICATOR.
6. IN ADDITION TO LOADS SPECIFIED IN THE LOAD TABLE, STRUCTURES SHALL BE DESIGNED FOR A 0.30 KIP VERTICAL POINT LOAD AT ANY POSITION ON THE STRUCTURE.
7. STRUCTURES SHALL BE DESIGNED FOR SECONDARY MOMENTS FROM NON-LINEAR P-DELTA EFFECTS & FOR AN ASSUMED ROTATION OF 1.0 DEGREE AT THE BASE.
8. UNFACTORED FOUNDATION LOADS SHALL BE PROVIDED BY FABRICATOR.
9. COLUMNS MAY BE TAPERED OR NON-TAPERED SECTIONS.
10. ALL STRUCTURE HEIGHTS SHALL BE MEASURED FROM BOTTOM OF BASE PLATE.
11. STRUCTURE DEFLECTIONS SHALL BE CHECKED FOR ALL LOADING COMBINATIONS WITH ALL LOAD FACTORS EQUAL TO 1.0. THE CALCULATED DEFLECTIONS SHALL NOT EXCEED:
    HORIZONTAL DEFLECTION OF VERTICAL MEMBERS 1/100 OF HEIGHT
    HORIZONTAL DEFLECTION OF HORIZONTAL MEMBERS 1/200 OF SPAN
    VERTICAL DEFLECTION OF HORIZONTAL MEMBERS 1/200 OF SPAN
12. DESIGN LOAD COMBINATIONS:

    LOAD COMBINATION 1 (NESC HEAVY)
    $1.1\ D + 1.2W_i + 1.65\ T_W + 2.5\ L_W + 1.5\ V_W + 1.1P_D + 1.2P_I + 1.2(H_W + M_W)$

    LOAD COMBINATION 2 (EXTREME WIND)
    $1.1\ D + 1.2\ W + 1.0\ T_W + 1.0\ L_W + 1.0\ V_W + 1.1P_D + 1.2(H_W + M_W)$

    LOAD COMBINATION 3 (CONCURRENT WIND / ICE)
    $1.1\ D + 1.2\ W_i + 1.0\ T_W + 1.0\ L_W + 1.0\ V_W + 1.1P_D + 1.2P_I + 1.2(H_W + M_W)$

    WHERE:
    W = WIND ON STRUCTURE (25 PSF)
    Wi = WIND W/ICE ON STRUCTURE (NESC HEAVY = 4 PSF & CONC. WIND/ ICE = 5 PSF)
    D = DEAD WEIGHT OF STRUCTURE
    L_W = LATERAL LOAD FROM WIRES (TRANSMISSION)
    T_W = TENSION OF WIRES (TRANSMISSION)
    V_W = VERTICAL LOAD OF WIRES (TRANSMISSION)
    P_D = DEAD LOAD OF ARRESTERS
    P_I = ICE LOAD ON ARRESTERS
    H_W = WIND LOAD AT ARRESTER BASE
    M_W = OVERTURNING MOMENT AT ARRESTER BASE DUE TO WIND

FABRICATION NOTES

1. SEE DESIGN NOTES FOR DETAILED DESIGN REQUIREMENTS.
2. ALL STEEL SHALL BE HOT-DIP GALVANIZED. SAFEGUARDS SHALL BE USED TO PREVENT WARPAGE, BENDING, AND EMBRITTLEMENT.
3. ALL WORK SHALL BE IN ACCORDANCE WITH AISC CODE OF STANDARD PRACTICE AND AWS D1.1.
4. MATERIAL CERTIFICATIONS SHALL BE SUBMITTED PRIOR TO FABRICATION.
5. WELDING INSPECTION AND WELDING INSPECTOR SHALL BE IN ACCORDANCE WITH AWS D1.1.
6. BASE PLATES SHALL BE TESTED FOR 100% OF THE VOLUME.

HOLD FOR FINAL DESIGN

PRELIMINARY
NOT FOR CONSTRUCTION

(1 REQUIRED)

NO	DATE	REVISIONS AND RECORD OF ISSUE	DRWN	REV'D	APPR	COMP
--						
--						
--						
--						
--						
--						
--						
A	02/28/2020	PRELIMINARY - ISSUED FOR BID	JB	NPR	-	S&L

SCALE:

PREP: MJD CHKD: NPR

APPD: - DATE: 02/28/2020

CONTRACTOR/INSTALLER SHALL TAKE ALL APPROPRIATE PRECAUTIONS TO ENSURE THE SAFETY OF ALL PEOPLE LOCATED ON THE WORK SITE; INCLUDING CONTRACTOR'S /INSTALLER'S PERSONNEL (OR THAT OF IT'S SUB-CONTRACTOR(S)) PERFORMING THE WORK.

ANY MODIFICATION OR ADDITION TO THIS DRAWING BY ANY ORGANIZATION OTHER THAN SARGENT & LUNDY IS NOT THE RESPONSIBILITY OF SARGENT & LUNDY.

Sargent & Lundy
55 EAST MONROE ST., CHICAGO, ILL.

NEXTera ENERGY TRANSMISSION NEW YORK

NEXTERA ENERGY TRANSMISSION NEW YORK, INC.
DYSINGER 345kV SWITCHYARD
345kV TWO BAY DEADEND WITH SWITCH LOAD TREE

DSY-S1-0113-1

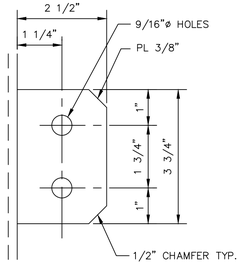

DETAIL A
GROUNDING LUG
SCALE: 6"=1'-0"

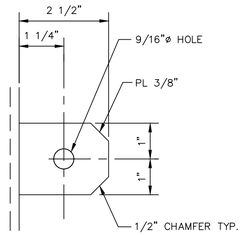

DETAIL B
GROUNDING LUG
SCALE: 6"=1'-0"

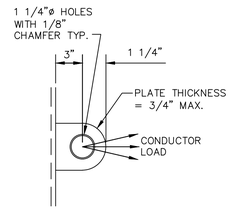

DETAIL C
CONDUCTOR LUG
SCALE: NONE

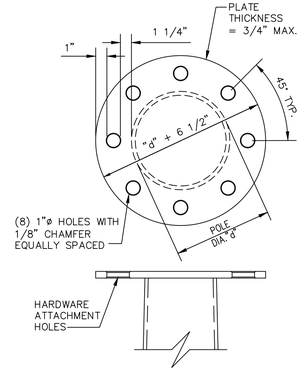

DETAIL D
STATIC LINE LUG
SCALE: NONE

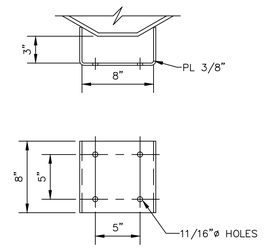

DETAIL E
LIGHT MOUNTING
SCALE: 1 1/2"=1'-0"

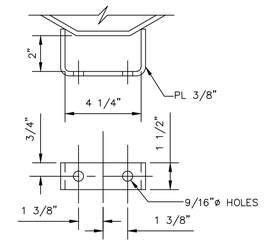

DETAIL F
CONDUIT SUPPORT
SCALE: 3"=1'-0"

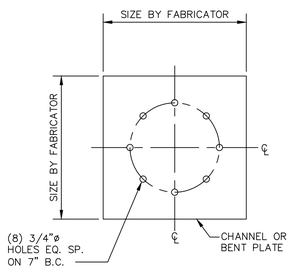

DETAIL G
INSULATOR
MOUNTING SUPPORT
SCALE: NONE

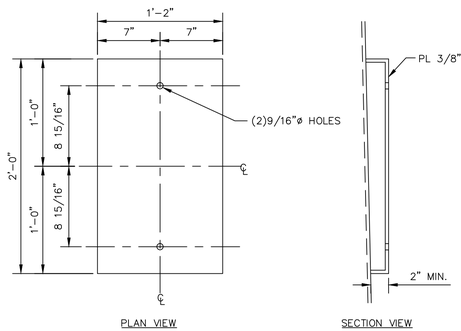

DETAIL H
OPGW SPLICE BOX
SUPPORT
SCALE: 1 1/2"=1'-0"

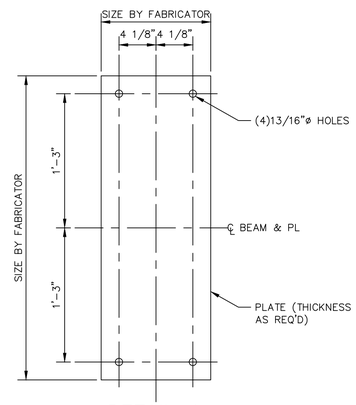

DETAIL J
V-SWITCH
MOUNTING SUPPORT
SCALE: NONE

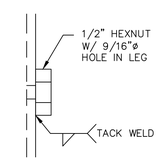

DETAIL Z
OPGW LUG
SCALE: NONE

HOLD FOR
FINAL DESIGN

PRELIMINARY
NOT FOR CONSTRUCTION

NO	DATE	REVISIONS AND RECORD OF ISSUE	DRWN	REV'D	APPR	COMP
--						
--						
--						
--						
--						
--						
--						
A	02/28/2020	PRELIMINARY - ISSUED FOR BID	JB	NPR	-	S&L

SCALE:

PREP: MJD | CHKD: NPR
APPD: - | DATE: 02/28/2020

CONTRACTOR/INSTALLER SHALL TAKE ALL APPROPRIATE PRECAUTIONS TO ENSURE THE SAFETY OF ALL PEOPLE LOCATED ON THE WORK SITE; INCLUDING CONTRACTOR'S /INSTALLER'S PERSONNEL (OR THAT OF IT'S SUB-CONTRACTOR(S)) PERFORMING THE WORK.

ANY MODIFICATION OR ADDITION TO THIS DRAWING BY ANY ORGANIZATION OTHER THAN SARGENT & LUNDY IS NOT THE RESPONSIBILITY OF SARGENT & LUNDY.

Sargent & Lundy
55 EAST MONROE ST., CHICAGO, ILL.

NEXTera ENERGY
TRANSMISSION NEW YORK

NEXTERA ENERGY TRANSMISSION NEW YORK, INC.
DYSINGER 345kV SWITCHYARD
345kV TWO BAY DEADEND WITH SWITCH LOAD TREE

DSY-S1-0113-2

BOLT SUMMARY			
QTY.	MARK	DESCRIPTION	WEIGHT
8	A325	5/8"ø x 2 3/4" BOLT H.H. & H.H. NUT	3
–	–	–	–
16	F436	5/8" STD. WASHER	1
–	–	–	–
–	–	–	–
		TOTAL BLACK WEIGHT	4
		TOTAL GALVANIZED WEIGHT	5

BOLT NOTES:

1. ONE STANDARD WASHER CONFORMING TO THE STANDARDS OF ASTM F436 SHALL BE USED UNDER THE HEAD AND NUT OF EACH BOLT.
2. NO BOLTS, NUTS AND WASHERS ARE INCLUDED FOR MOUNTING OF EQUIPMENT.

BOLT LEGEND:

4–2 3/4"
- LENGTH
- NO. BOLTS

* INDICATES SHOP BOLTS TO BE FINGER TIGHT FOR SHIPMENT.

BILL OF MATERIALS						
MARK	QTY.	DESCRIPTION	LENGTH FT.	LENGTH INS.	WEIGHT	
MK–h1	2	HSS 10x10x5/16	12	4 1/8	997	* LOW SUPPORT ONLY
MK–h2	2	HSS 10x10x5/16	23	4 1/8	1884	* HIGH SUPPORT ONLY
MK–h3	1	HSS 10x10x5/16	31	6	1272	
MK–c1	3	MC10x41.1	0	8	83	
MK–p1	2	PL 1x18	1	6	184	
MK–p2	4	PL 3/4x16	1	4	218	
MK–p3	4	PL 3/8x2 1/4	0	3 3/4	4	
MK–p4	2	PL 1/4x9 5/8	0	9 5/8	16	
		TOTAL BLACK WEIGHT (LOW SUPPORT)			2774	
		TOTAL GALVANIZED WEIGHT (LOW SUPPORT)			2912	
		TOTAL BLACK WEIGHT (HIGH SUPPORT)			3661	
		TOTAL GALVANIZED WEIGHT (HIGH SUPPORT)			3844	

NOTE:

EACH PART OR ASSEMBLY SHALL BE MARKED WITH THE PIECE OR ASSEMBLY MARK. THE MARKING SHALL BE MADE BEFORE GALVANIZING BY STAMPING WITH DIES (3/4" HIGH LETTERS).

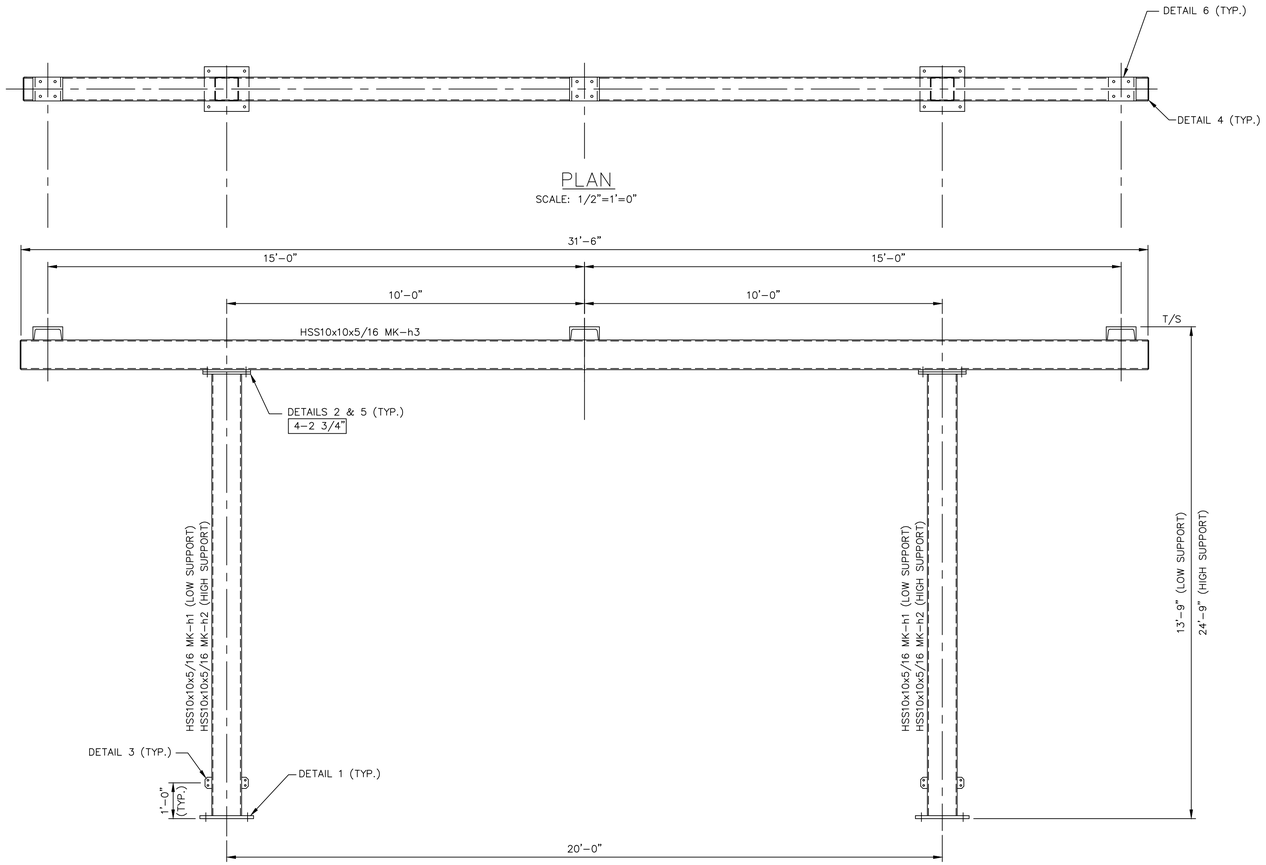

PLAN
SCALE: 1/2"=1'=0"

ELEVATION
SCALE: 1/2"=1'=0"
(LOW BUS SUPPORT = 8 REQUIRED)
(HIGH BUS SUPPORT = 16 REQUIRED)

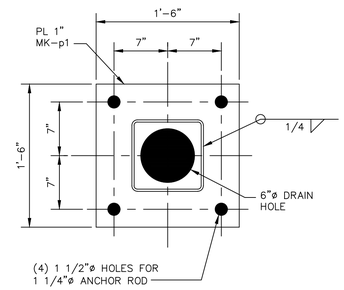

DETAIL 1
SCALE: NONE

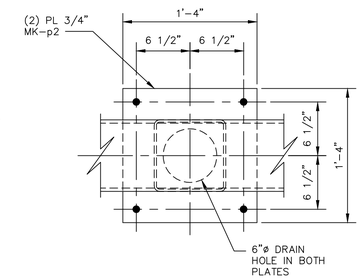

DETAIL 2
SCALE: NONE

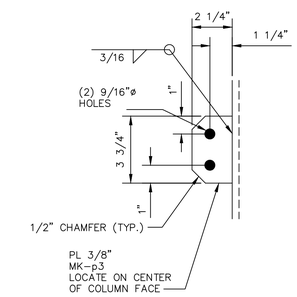

DETAIL 3
SCALE: NONE

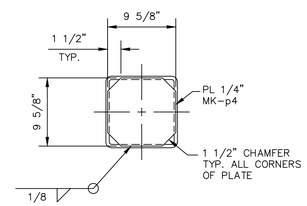

DETAIL 4
SCALE: NONE

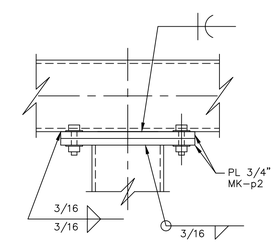

DETAIL 5
SCALE: NONE

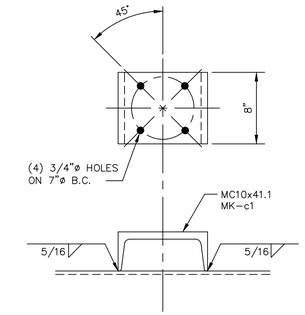

DETAIL 6
SCALE: NONE

HOLD FOR FINAL DESIGN

PRELIMINARY
NOT FOR CONSTRUCTION

NOTES

1. ALL WORK ON THIS DRAWING SHALL BE FURNISHED AND INSTALLED IN ACCORDANCE WITH THE SCOPE OF WORK SPECIFICATION UNLESS NOTED.
2. FOR STRUCTURAL STEEL GENERAL NOTES SEE DRAWING DSY–S1–0110.

NO	DATE	REVISIONS AND RECORD OF ISSUE	DRWN	REV'D	APPR	COMP
--						
--						
--						
--						
--						
--						
--						
A	02/28/2020	PRELIMINARY - ISSUED FOR BID	JB	NPR	-	S&L

SCALE: 1/2"=1'-0"

PREP: MJD | CHKD: NPR
APPD: - | DATE: 02/28/2020

CONTRACTOR/INSTALLER SHALL TAKE ALL APPROPRIATE PRECAUTIONS TO ENSURE THE SAFETY OF ALL PEOPLE LOCATED ON THE WORK SITE; INCLUDING CONTRACTOR'S /INSTALLER'S PERSONNEL (OR THAT OF IT'S SUB-CONTRACTOR(S)) PERFORMING THE WORK.

ANY MODIFICATION OR ADDITION TO THIS DRAWING BY ANY ORGANIZATION OTHER THAN SARGENT & LUNDY IS NOT THE RESPONSIBILITY OF SARGENT & LUNDY.

Sargent & Lundy
55 EAST MONROE ST., CHICAGO, ILL.

NEXTera ENERGY
TRANSMISSION NEW YORK

NEXTERA ENERGY TRANSMISSION NEW YORK, INC.
DYSINGER 345kV SWITCHYARD
345kV BUS SUPPORT

DSY-S1-0114

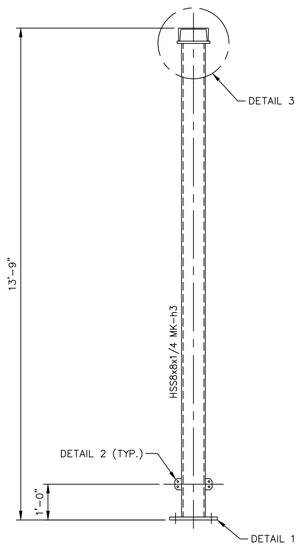

ELEVATION – BUS SUPPORT
SCALE: 1/2"=1'0"
(30 REQUIRED)

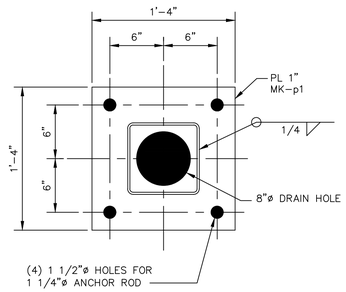

DETAIL 1
SCALE: NONE

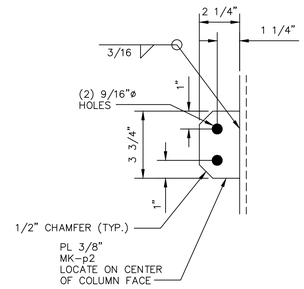

DETAIL 2
SCALE: 3"=1'-0"

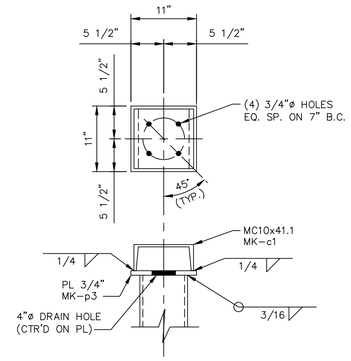

DETAIL 3
SCALE: 1"=1'-0"

BILL OF MATERIALS

MARK	QTY.	DESCRIPTION	LENGTH FT.	LENGTH INS.	WEIGHT
MK-h1	1	HSS 8x8x1/4	13	2 7/8	341
MK-p1	1	PL 1x16	1	4	73
MK-p2	2	PL 3/8x2 1/4	0	3 3/4	2
MK-p3	1	PL 3/4x11	0	11	26
MK-c1	1	MC10x41.1	0	10	34
		TOTAL BLACK WEIGHT			476
		TOTAL GALVANIZED WEIGHT			493

NOTE:

EACH PART OR ASSEMBLY SHALL BE MARKED WITH THE PIECE OR ASSEMBLY MARK. THE MARKING SHALL BE MADE BEFORE GALVANIZING BY STAMPING WITH DIES (3/4" HIGH LETTERS).

HOLD FOR
FINAL DESIGN

PRELIMINARY
NOT FOR CONSTRUCTION

NOTES

1. ALL WORK ON THIS DRAWING SHALL BE FURNISHED AND INSTALLED IN ACCORDANCE WITH THE SCOPE OF WORK SPECIFICATION UNLESS NOTED.
2. FOR STRUCTURAL STEEL GENERAL NOTES SEE DRAWING DSY-S1-0110.

NO	DATE	REVISIONS AND RECORD OF ISSUE	DRWN	REV'D	APPR	COMP
--						
--						
--						
--						
--						
--						
--						
A	02/28/2020	PRELIMINARY - ISSUED FOR BID	JB	NPR	-	S&L

SCALE: AS NOTED
PREP: MJD CHKD: NPR
APPD: - DATE: 02/28/2020

CONTRACTOR/INSTALLER SHALL TAKE ALL APPROPRIATE PRECAUTIONS TO ENSURE THE SAFETY OF ALL PEOPLE LOCATED ON THE WORK SITE; INCLUDING CONTRACTOR'S /INSTALLER'S PERSONNEL (OR THAT OF IT'S SUB-CONTRACTOR(S)) PERFORMING THE WORK.

ANY MODIFICATION OR ADDITION TO THIS DRAWING BY ANY ORGANIZATION OTHER THAN SARGENT & LUNDY IS NOT THE RESPONSIBILITY OF SARGENT & LUNDY.

Sargent & Lundy
55 EAST MONROE ST., CHICAGO, ILL.

NEXTera ENERGY
TRANSMISSION NEW YORK

NEXTERA ENERGY TRANSMISSION NEW YORK, INC.
DYSINGER 345kV SWITCHYARD
345kV SINGLE-PHASE BUS SUPPORT

DSY-S1-0115

BILL OF MATERIALS					
MARK	QTY.	DESCRIPTION	LENGTH FT.	LENGTH INS.	WEIGHT
MK-h1	1	HSS 8x8x1/4	8	4 1/4	216
MK-p1	1	PL 1x16	1	4	73
MK-p2	2	PL 3/8x2 1/4	0	3 3/4	2
MK-p3	6	PL 3/8x2	0	2 1/4	3
MK-p4	1	PL 1/2x8	4	0	54
MK-p5	1	PL 3/4x18	2	0	92
MK-u1	2	P1000 UNISTRUT	0	6	2
		TOTAL BLACK WEIGHT			443
		TOTAL GALVANIZED WEIGHT			462

NOTE:

EACH PART OR ASSEMBLY SHALL BE MARKED WITH THE PIECE OR ASSEMBLY MARK. THE MARKING SHALL BE MADE BEFORE GALVANIZING BY STAMPING WITH DIES (3/4" HIGH LETTERS).

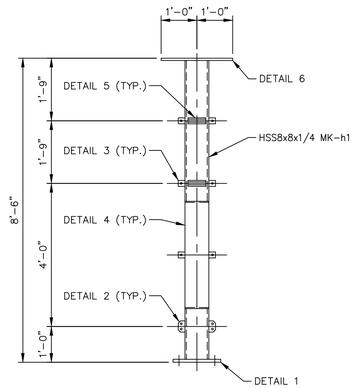

ELEVATION
SCALE: 1/2"=1'0"
(27 REQUIRED)

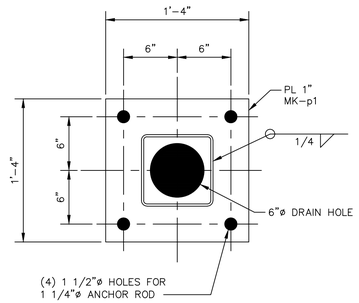

DETAIL 1
SCALE: NONE

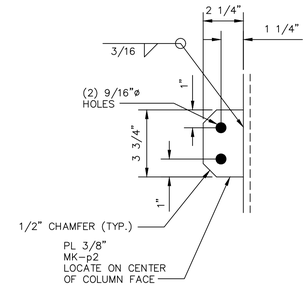

DETAIL 2
SCALE: 3"=1'-0"

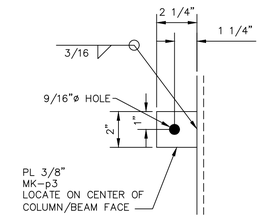

DETAIL 3
SCALE: 3"=1'-0"

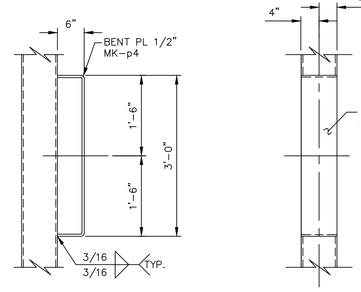

DETAIL 4
SCALE: NONE

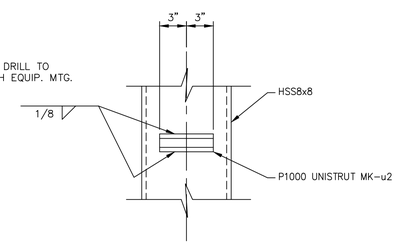

DETAIL 5
SCALE: 1 1/2"=1'-0"

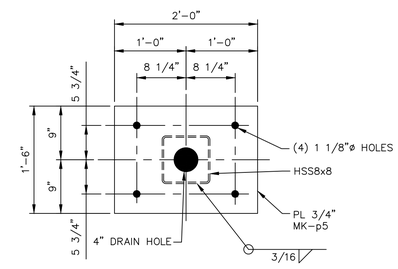

DETAIL 6
SCALE: 1"=1'-0"

HOLD FOR
FINAL DESIGN

PRELIMINARY
NOT FOR CONSTRUCTION

NOTES

1. ALL WORK ON THIS DRAWING SHALL BE FURNISHED AND INSTALLED IN ACCORDANCE WITH THE SCOPE OF WORK SPECIFICATION UNLESS NOTED.
2. FOR STRUCTURAL STEEL GENERAL NOTES SEE DRAWING DSY-S1-0110.

NO	DATE	REVISIONS AND RECORD OF ISSUE	DRWN	REV'D	APPR	COMP
--						
--						
--						
--						
--						
--						
--						
A	02/28/2020	PRELIMINARY - ISSUED FOR BID	JB	NPR	-	S&L

SCALE: AS NOTED

PREP: MJD CHKD: NPR
APPD: - DATE: 02/28/2020

CONTRACTOR/INSTALLER SHALL TAKE ALL APPROPRIATE PRECAUTIONS TO ENSURE THE SAFETY OF ALL PEOPLE LOCATED ON THE WORK SITE; INCLUDING CONTRACTOR'S /INSTALLER'S PERSONNEL (OR THAT OF IT'S SUB-CONTRACTOR(S)) PERFORMING THE WORK.

ANY MODIFICATION OR ADDITION TO THIS DRAWING BY ANY ORGANIZATION OTHER THAN SARGENT & LUNDY IS NOT THE RESPONSIBILITY OF SARGENT & LUNDY.

Sargent & Lundy
55 EAST MONROE ST., CHICAGO, ILL.

NEXTera ENERGY TRANSMISSION NEW YORK

NEXTERA ENERGY TRANSMISSION NEW YORK, INC.
DYSINGER 345kV SWITCHYARD
345kV CCVT STAND

DSY-S1-0116

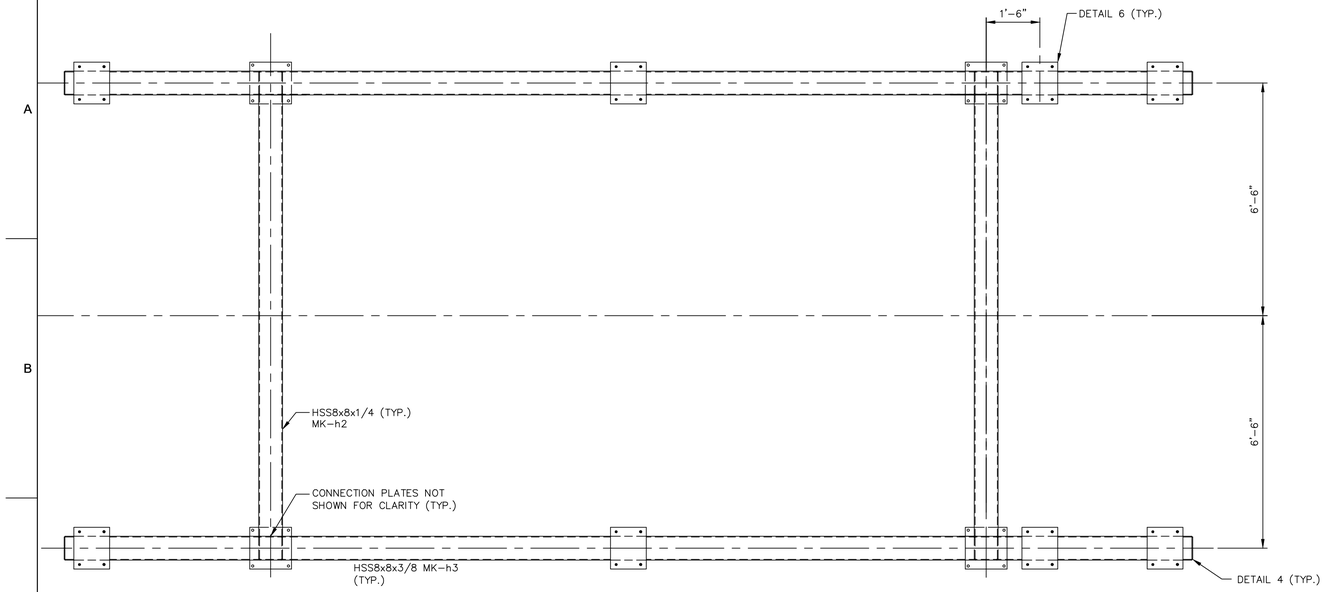

PLAN

SCALE: 1/2"=1'=0"

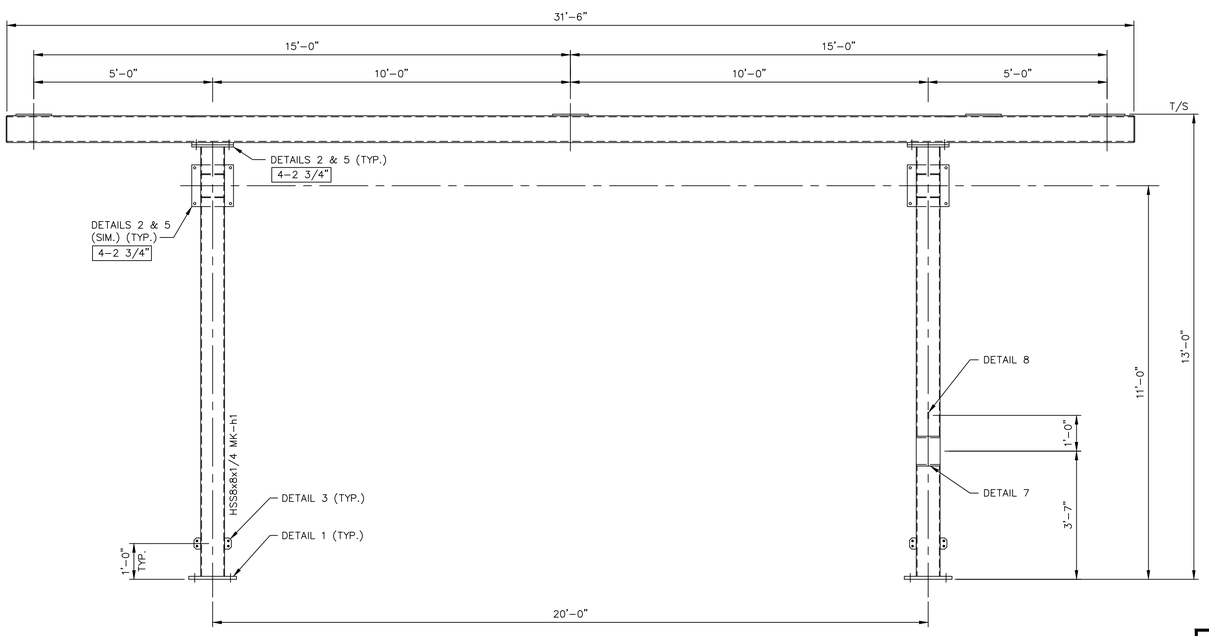

ELEVATION

SCALE: 1/2"=1'=0"

(32 REQUIRED)

BOLT SUMMARY (PER STRUCTURE)			
QTY.	MARK	DESCRIPTION	WEIGHT
32	A325	5/8"ø x 3 1/4" BOLT H.H. & H.H. NUT	15
–	–	–	–
64	F436	5/8" STD. WASHER	4
–	–	–	–
–	–	–	–
		TOTAL BLACK WEIGHT	19
		TOTAL GALVANIZED WEIGHT	20

BOLT NOTES:

1. ONE STANDARD WASHER CONFORMING TO THE STANDARDS OF ASTM F436 SHALL BE USED UNDER THE HEAD AND NUT OF EACH BOLT.
2. NO BOLTS, NUTS AND WASHERS ARE INCLUDED FOR MOUNTING OF EQUIPMENT.

BOLT LEGEND:

4-2 3/4"
- LENGTH
- NO. BOLTS

* INDICATES SHOP BOLTS TO BE FINGER TIGHT FOR SHIPMENT.

BILL OF MATERIALS					
MARK	QTY.	DESCRIPTION	LENGTH FT.	LENGTH INS.	WEIGHT
MK-h1a	4	HSS 8x8x1/4	12	0	1240
MK-h2	2	HSS 8x8x1/4	12	0	620
MK-h3	2	HSS 8x8x3/8	31	6	2374
MK-p1	4	PL 1x16	1	4	291
MK-p2	16	PL 1x14	1	2	889
MK-p3	8	PL 3/8x2 1/4	0	3 3/4	8
MK-p4	4	PL 1/4x7 5/8	0	7 5/8	17
MK-p5	8	PL 1x12	1	3	408
MK-p6	1	PL 1/2x8	2	4	32
MK-p7	1	PL 1/2x7 1/2	0	11	12
MK-p8	1	PL 3/8x2	0	2 1/4	1
TOTAL BLACK WEIGHT					5892
TOTAL GALVANIZED WEIGHT					6095

NOTE:

EACH PART OR ASSEMBLY SHALL BE MARKED WITH THE PIECE OR ASSEMBLY MARK. THE MARKING SHALL BE MADE BEFORE GALVANIZING BY STAMPING WITH DIES (3/4" HIGH LETTERS).

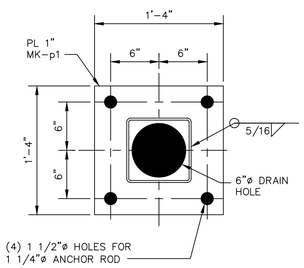

DETAIL 1

SCALE: NONE

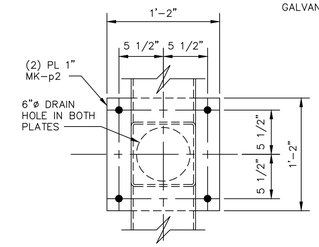

DETAIL 2

SCALE: NONE

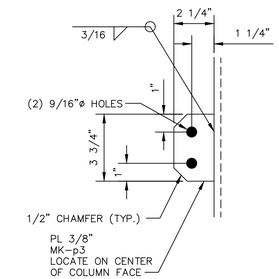

DETAIL 3

SCALE: NONE

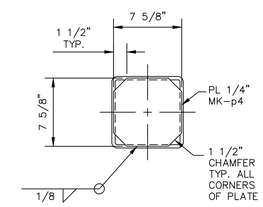

DETAIL 4

SCALE: NONE

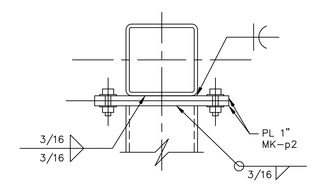

DETAIL 5

SCALE: NONE

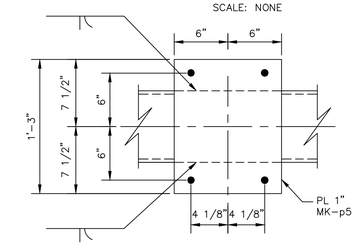

DETAIL 6

SCALE: NONE

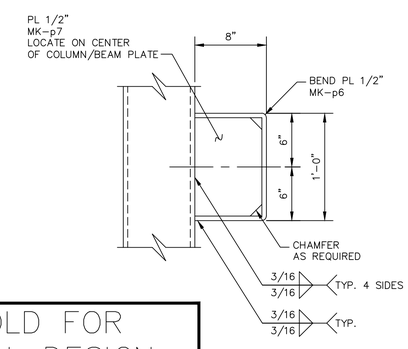

DETAIL 7

SCALE: NONE

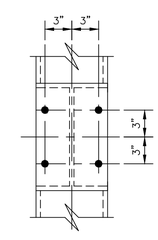

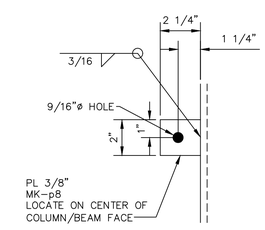

DETAIL 8

SCALE: NONE

HOLD FOR
FINAL DESIGN

PRELIMINARY
NOT FOR CONSTRUCTION

NOTES

1. ALL WORK ON THIS DRAWING SHALL BE FURNISHED AND INSTALLED IN ACCORDANCE WITH THE SCOPE OF WORK SPECIFICATION UNLESS NOTED.
2. FOR STRUCTURAL STEEL GENERAL NOTES SEE DRAWING DSY-S1-0110.

NO	DATE	REVISIONS AND RECORD OF ISSUE	DRWN	REV'D	APPR	COMP
--						
--						
--						
--						
--						
--						
--						
A	02/28/2020	PRELIMINARY - ISSUED FOR BID	JB	NPR	-	S&L

SCALE: 1/2"=1'-0"

PREP: MJD CHKD: NPR

APPD: - DATE: 02/28/2020

CONTRACTOR/INSTALLER SHALL TAKE ALL APPROPRIATE PRECAUTIONS TO ENSURE THE SAFETY OF ALL PEOPLE LOCATED ON THE WORK SITE; INCLUDING CONTRACTOR'S /INSTALLER'S PERSONNEL (OR THAT OF IT'S SUB-CONTRACTOR(S)) PERFORMING THE WORK.

ANY MODIFICATION OR ADDITION TO THIS DRAWING BY ANY ORGANIZATION OTHER THAN SARGENT & LUNDY IS NOT THE RESPONSIBILITY OF SARGENT & LUNDY.

Sargent & Lundy
55 EAST MONROE ST., CHICAGO, ILL.

NEXTera ENERGY TRANSMISSION NEW YORK

NEXTERA ENERGY TRANSMISSION NEW YORK, INC.
DYSINGER 345kV SWITCHYARD
345kV SWITCH STAND

DSY-S1-0117

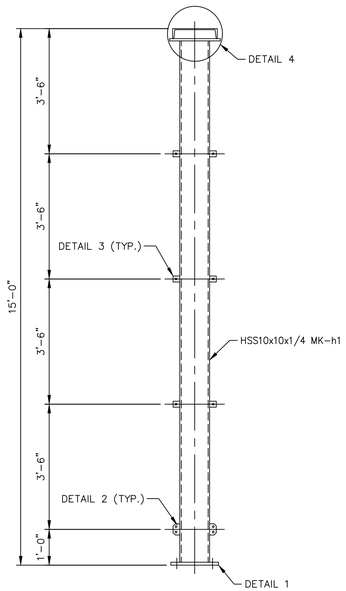

ELEVATION
SCALE: 1/2"=1'0"
(21 REQUIRED)

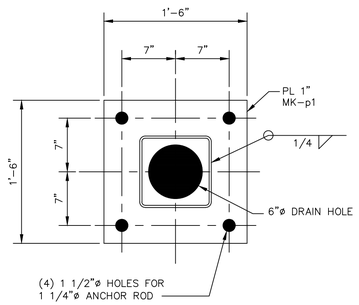

DETAIL 1
SCALE: NONE

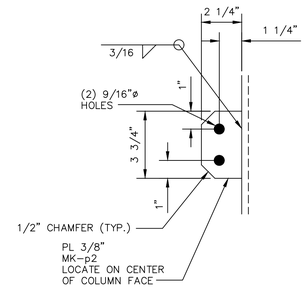

DETAIL 2
SCALE: 3"=1'-0"

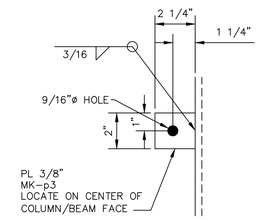

DETAIL 3
SCALE: 3"=1'-0"

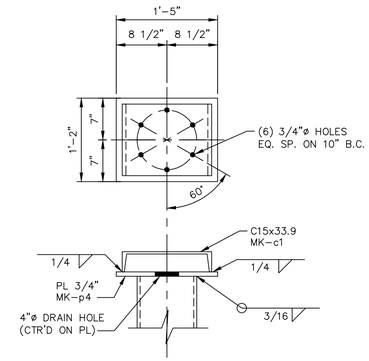

DETAIL 4
SCALE: 1"=1'-0"

BILL OF MATERIALS

MARK	QTY.	DESCRIPTION	LENGTH FT.	LENGTH INS.	WEIGHT
MK-h1	1	HSS 10x10x1/4	14	6 7/8	476
MK-c1	1	C15x33.9	1	0	34
MK-p1	1	PL 1x18	1	8	92
MK-p2	2	PL 3/8x2 1/4	0	3 3/4	2
MK-p3	6	PL 3/8x2	0	2 1/4	3
MK-p4	1	PL 3/4x17	1	5	51
		TOTAL BLACK WEIGHT			658
		TOTAL GALVANIZED WEIGHT			681

NOTE:

EACH PART OR ASSEMBLY SHALL BE MARKED WITH THE PIECE OR ASSEMBLY MARK. THE MARKING SHALL BE MADE BEFORE GALVANIZING BY STAMPING WITH DIES (3/4" HIGH LETTERS).

HOLD FOR
FINAL DESIGN

PRELIMINARY
NOT FOR CONSTRUCTION

NOTES

1. ALL WORK ON THIS DRAWING SHALL BE FURNISHED AND INSTALLED IN ACCORDANCE WITH THE SCOPE OF WORK SPECIFICATION UNLESS NOTED.
2. FOR STRUCTURAL STEEL GENERAL NOTES SEE DRAWING DSY-S1-0110.

NO	DATE	REVISIONS AND RECORD OF ISSUE	DRWN	REV'D	APPR	COMP
--						
--						
--						
--						
--						
--						
--						
A	02/28/2020	PRELIMINARY - ISSUED FOR BID	JB	NPR	-	S&L

SCALE: AS NOTED

PREP: MJD CHKD: NPR
APPD: - DATE: 02/28/2020

CONTRACTOR/INSTALLER SHALL TAKE ALL APPROPRIATE PRECAUTIONS TO ENSURE THE SAFETY OF ALL PEOPLE LOCATED ON THE WORK SITE; INCLUDING CONTRACTOR'S /INSTALLER'S PERSONNEL (OR THAT OF IT'S SUB-CONTRACTOR(S)) PERFORMING THE WORK.

ANY MODIFICATION OR ADDITION TO THIS DRAWING BY ANY ORGANIZATION OTHER THAN SARGENT & LUNDY IS NOT THE RESPONSIBILITY OF SARGENT & LUNDY.

Sargent & Lundy
55 EAST MONROE ST., CHICAGO, ILL.

NEXTera ENERGY
TRANSMISSION NEW YORK

NEXTERA ENERGY TRANSMISSION NEW YORK, INC.
DYSINGER 345kV SWITCHYARD
345kV SURGE ARRESTOR STAND

DSY-S1-0118

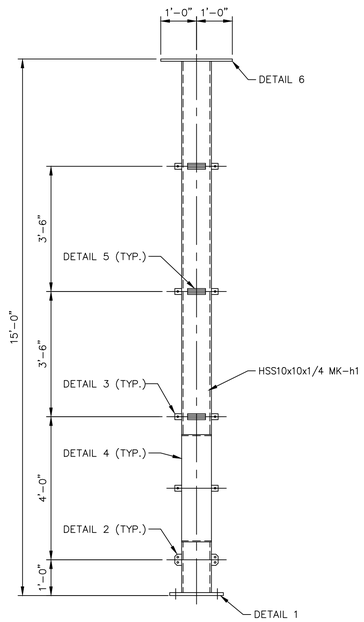

ELEVATION
SCALE: 1/2"=1'0"
(18 REQUIRED)

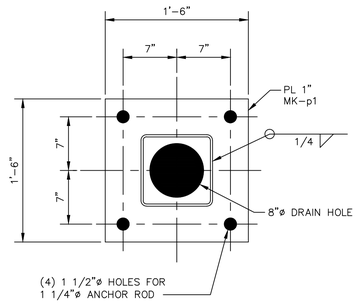

DETAIL 1
SCALE: NONE

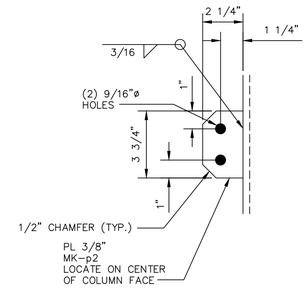

DETAIL 2
SCALE: 3"=1'-0"

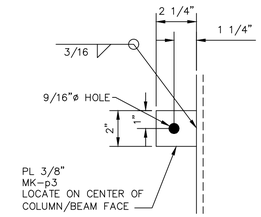

DETAIL 3
SCALE: 3"=1'-0"

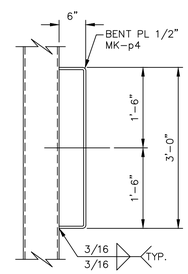

DETAIL 4
SCALE: NONE

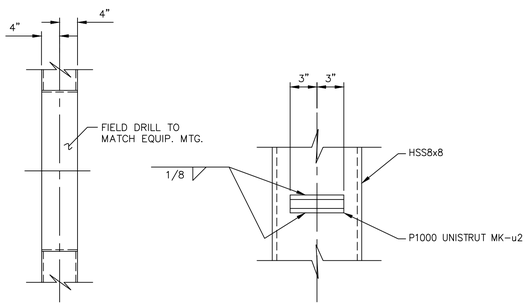

DETAIL 5
SCALE: 1 1/2"=1'-0"

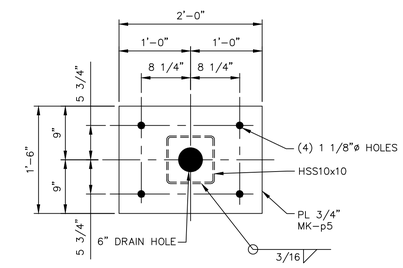

DETAIL 6
SCALE: 1"=1'-0"

BILL OF MATERIALS

MARK	QTY.	DESCRIPTION	LENGTH FT.	LENGTH INS.	WEIGHT
MK-h1	1	HSS 10x10x1/4	14	10 1/4	600
MK-p1	1	PL 1x18	1	6	92
MK-p2	2	PL 3/8x2 1/4	0	3 3/4	2
MK-p3	8	PL 3/8x2	0	2 1/4	4
MK-p4	1	PL 1/2x8	4	0	54
MK-p5	1	PL 3/4x18	2	0	92
MK-u1	3	P1000 UNISTRUT	0	6	3
		TOTAL BLACK WEIGHT			847
		TOTAL GALVANIZED WEIGHT			877

NOTE:

EACH PART OR ASSEMBLY SHALL BE MARKED WITH THE PIECE OR ASSEMBLY MARK. THE MARKING SHALL BE MADE BEFORE GALVANIZING BY STAMPING WITH DIES (3/4" HIGH LETTERS).

HOLD FOR
FINAL DESIGN

PRELIMINARY
NOT FOR CONSTRUCTION

NOTES

1. ALL WORK ON THIS DRAWING SHALL BE FURNISHED AND INSTALLED IN ACCORDANCE WITH THE SCOPE OF WORK SPECIFICATION UNLESS NOTED.
2. FOR STRUCTURAL STEEL GENERAL NOTES SEE DRAWING DSY-S1-0110.

NO	DATE	REVISIONS AND RECORD OF ISSUE	DRWN	REV'D	APPR	COMP
--						
--						
--						
--						
--						
--						
--						
A	02/28/2020	PRELIMINARY - ISSUED FOR BID	JB	NPR	-	S&L

SCALE: AS NOTED

PREP: MJD CHKD: NPR
APPD: - DATE: 02/28/2020

CONTRACTOR/INSTALLER SHALL TAKE ALL APPROPRIATE PRECAUTIONS TO ENSURE THE SAFETY OF ALL PEOPLE LOCATED ON THE WORK SITE; INCLUDING CONTRACTOR'S /INSTALLER'S PERSONNEL (OR THAT OF IT'S SUB-CONTRACTOR(S)) PERFORMING THE WORK.

ANY MODIFICATION OR ADDITION TO THIS DRAWING BY ANY ORGANIZATION OTHER THAN SARGENT & LUNDY IS NOT THE RESPONSIBILITY OF SARGENT & LUNDY.

Sargent & Lundy
55 EAST MONROE ST., CHICAGO, ILL.

NEXTera ENERGY TRANSMISSION NEW YORK

NEXTERA ENERGY TRANSMISSION NEW YORK, INC.
DYSINGER 345kV SWITCHYARD
345kV CT/PT STAND

DYS-S1-0119

BILL OF MATERIALS					
MARK	QTY.	DESCRIPTION	LENGTH FT.	LENGTH INS.	WEIGHT
MK-h1	1	HSS 8x8x1/4	8	4 1/4	216
MK-p1	1	PL 1x16	1	4	73
MK-p2	2	PL 3/8x2 1/4	0	3 3/4	2
MK-p3	6	PL 3/8x2	0	2 1/4	3
MK-p4	1	PL 1/2x8	4	0	54
MK-p5	1	PL 3/4x18	2	0	92
MK-u1	2	P1000 UNISTRUT	0	6	2
		TOTAL BLACK WEIGHT			443
		TOTAL GALVANIZED WEIGHT			462

NOTE:

EACH PART OR ASSEMBLY SHALL BE MARKED WITH THE PIECE OR ASSEMBLY MARK. THE MARKING SHALL BE MADE BEFORE GALVANIZING BY STAMPING WITH DIES (3/4" HIGH LETTERS).

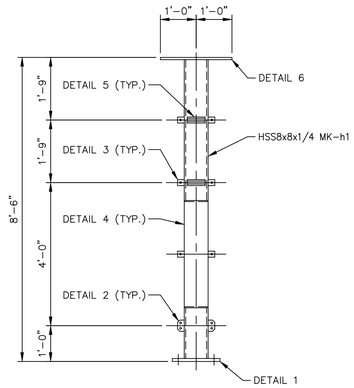

ELEVATION
SCALE: 1/2"=1'0"
(3 REQUIRED)

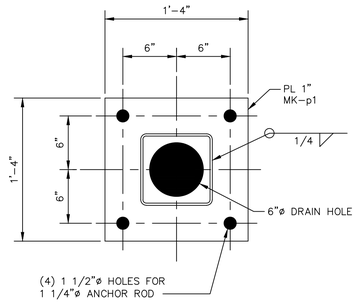

DETAIL 1
SCALE: NONE

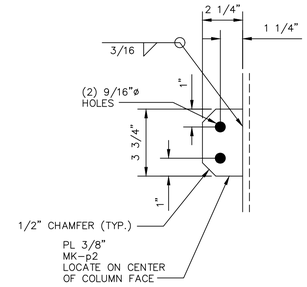

DETAIL 2
SCALE: 3"=1'-0"

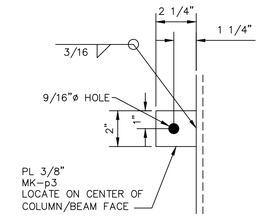

DETAIL 3
SCALE: 3"=1'-0"

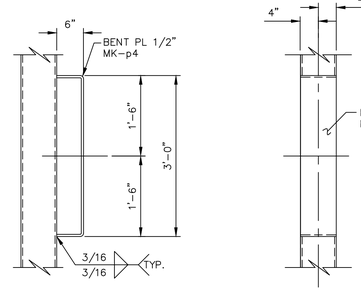

DETAIL 4
SCALE: NONE

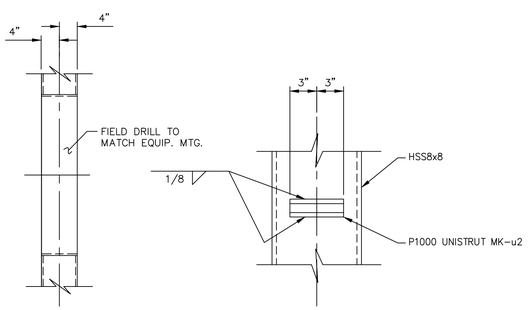

DETAIL 5
SCALE: 1 1/2"=1'-0"

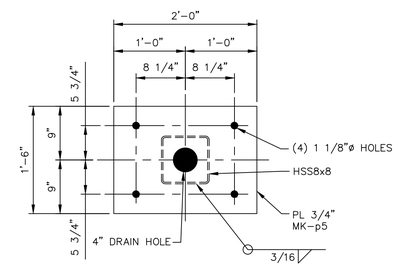

DETAIL 6
SCALE: 1"=1'-0"

HOLD FOR
FINAL DESIGN

PRELIMINARY
NOT FOR CONSTRUCTION

NOTES

1. ALL WORK ON THIS DRAWING SHALL BE FURNISHED AND INSTALLED IN ACCORDANCE WITH THE SCOPE OF WORK SPECIFICATION UNLESS NOTED.
2. FOR STRUCTURAL STEEL GENERAL NOTES SEE DRAWING DSY-S1-0110.

NO	DATE	REVISIONS AND RECORD OF ISSUE	DRWN	REV'D	APPR	COMP
--						
--						
--						
--						
--						
--						
--						
A	02/28/2020	PRELIMINARY - ISSUED FOR BID	JB	NPR	-	S&L

SCALE: AS NOTED

PREP: MJD CHKD: NPR
APPD: - DATE: 02/28/2020

CONTRACTOR/INSTALLER SHALL TAKE ALL APPROPRIATE PRECAUTIONS TO ENSURE THE SAFETY OF ALL PEOPLE LOCATED ON THE WORK SITE; INCLUDING CONTRACTOR'S /INSTALLER'S PERSONNEL (OR THAT OF IT'S SUB-CONTRACTOR(S)) PERFORMING THE WORK.

ANY MODIFICATION OR ADDITION TO THIS DRAWING BY ANY ORGANIZATION OTHER THAN SARGENT & LUNDY IS NOT THE RESPONSIBILITY OF SARGENT & LUNDY.

Sargent & Lundy
55 EAST MONROE ST., CHICAGO, ILL.

NEXTera ENERGY
TRANSMISSION NEW YORK

NEXTERA ENERGY TRANSMISSION NEW YORK, INC.
DYSINGER 345kV SWITCHYARD
345KV CCVT & WAVE TRAP STAND

DSY-S1-0120

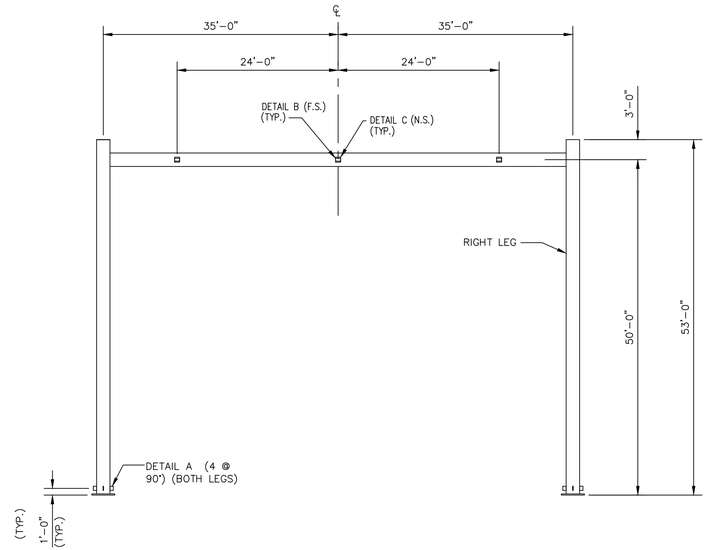

FRONT ELEVATION (FACE X)

SCALE 3/32"=1'-0"

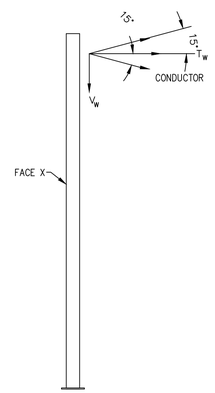

SIDE ELEVATION

SCALE 3/32"=1'-0"

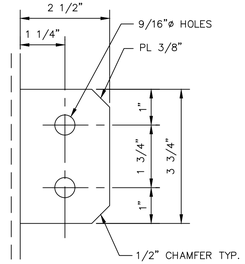

DETAIL A

GROUNDING LUG

SCALE: 6"=1'-0"

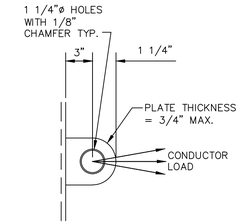

DETAIL B

CONDUCTOR VANG

SCALE: 6"=1'-0"

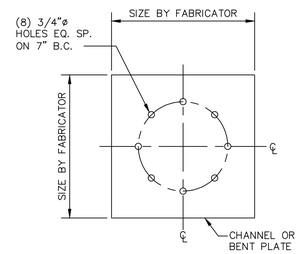

DETAIL G

INSULATOR MOUNTING SUPPORT

SCALE: NONE

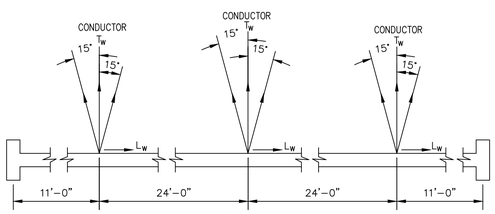

PLAN

SCALE: NONE

LOAD TABLE (SUBSTATION)			
LOAD	CONDUCTOR		
	L_W	T_W	V_W
NESC HEAVY	700	14500	2500
EXTREME WIND	1100	9100	1800
CONCURRENT WIND / ICE	800	16000	3100

WIND SHAPE FACTOR TABLE			
SHAPE		6 TO 10 SIDES	12 OR MORE SIDES
SHAPE FACTOR	2.0	1.4	1.0

LOAD TABLE (INSULATOR)				
LOAD	P_D	P_I	H_W	M_W
NESC HEAVY	400	100	100	200
EXTREME WIND	400	0	200	800
CONCURRENT WIND/ICE	400	200	100	200

NOTE: INSULATOR LOADS SHALL BE APPLIED AT DETAIL C

DESIGN NOTES

1. STRUCTURE IS SHOWN SCHEMATICALLY. ALL WORK ON THIS DRAWING SHALL BE DESIGNED AND FURNISHED BY FABRICATOR.
2. ALL ANCHOR BOLTS SHALL BE DESIGNED AND FURNISHED BY FABRICATOR. ASSUME 3000 PSI CONCRETE AND 3" COVER.
3. ALL CONDUCTOR, STATIC LINE, AND EQUIPMENT LOADS SPECIFIED IN THE LOAD TABLE ARE IN POUNDS AND POUND-FEET.
4. THE WIND PRESSURE LOADS SPECIFIED DO NOT INCLUDE SHAPE FACTORS. WIND PRESSURES SHALL BE MULTIPLIED BY THE APPROPRIATE SHAPE FACTOR (SEE WIND SHAPE FACTOR TABLE), AND THEN APPLIED TO THE STRUCTURE .
5. THE DEAD LOADS IN THE TABLE DO NOT INCLUDE DEAD WEIGHT OF THE STRUCTURE. THE STRUCTURE DEAD WEIGHT SHALL BE SUPPLIED BY THE FABRICATOR.
6. IN ADDITION TO LOADS SPECIFIED IN THE LOAD TABLE, STRUCTURES SHALL BE DESIGNED FOR A 0.30 KIP VERTICAL POINT LOAD AT ANY POSITION ON THE STRUCTURE.
7. STRUCTURES SHALL BE DESIGNED FOR SECONDARY MOMENTS FROM NON-LINEAR P-DELTA EFFECTS & FOR AN ASSUMED ROTATION OF 1.0 DEGREE AT THE BASE.
8. UNFACTORED FOUNDATION LOADS SHALL BE PROVIDED BY FABRICATOR.
9. COLUMNS MAY BE TAPERED OR NON-TAPERED SECTIONS.
10. ALL STRUCTURE HEIGHTS SHALL BE MEASURED FROM BOTTOM OF BASE PLATE.
11. STRUCTURE DEFLECTIONS SHALL BE CHECKED FOR ALL LOADING COMBINATIONS WITH ALL LOAD FACTORS EQUAL TO 1.0. THE CALCULATED DEFLECTIONS SHALL NOT EXCEED:
    - HORIZONTAL DEFLECTION OF VERTICAL MEMBERS 1/100 OF HEIGHT
    - HORIZONTAL DEFLECTION OF HORIZONTAL MEMBERS 1/200 OF SPAN
    - VERTICAL DEFLECTION OF HORIZONTAL MEMBERS 1/200 OF SPAN
12. DESIGN LOAD COMBINATIONS:

    LOAD COMBINATION 1 (NESC HEAVY)
    $1.1\ D + 1.2W_i + 1.65\ T_W + 2.5\ L_W + 1.5\ V_W + 1.1P_D + 1.2P_I + 1.2(H_W + M_W)$

    LOAD COMBINATION 2 (EXTREME WIND)
    $1.1\ D + 1.2\ W + 1.0\ T_W + 1.0\ L_W + 1.0\ V_W + 1.1P_D + 1.2(H_W + M_W)$

    LOAD COMBINATION 3 (CONCURRENT WIND / ICE)
    $1.1\ D + 1.2\ W_i + 1.0\ T_W + 1.0\ L_W + 1.0\ V_W + 1.1P_D + 1.2P_I + 1.2(H_W + M_W)$

    WHERE:
    - W = WIND ON STRUCTURE (25 PSF)
    - Wi = WIND W/ICE ON STRUCTURE (NESC HEAVY = 4 PSF & CONC. WIND/ ICE = 5 PSF)
    - D = DEAD WEIGHT OF STRUCTURE
    - L_W = LATERAL LOAD FROM WIRES (TRANSMISSION)
    - T_W = TENSION OF WIRES (TRANSMISSION)
    - V_W = VERTICAL LOAD OF WIRES (TRANSMISSION)
    - P_D = DEAD LOAD OF ARRESTERS
    - P_I = ICE LOAD ON ARRESTERS
    - H_W = WIND LOAD AT ARRESTER BASE
    - M_W = OVERTURNING MOMENT AT ARRESTER BASE DUE TO WIND

FABRICATION NOTES

1. SEE DESIGN NOTES FOR DETAILED DESIGN REQUIREMENTS.
2. ALL STEEL SHALL BE HOT-DIP GALVANIZED. SAFEGUARDS SHALL BE USED TO PREVENT WARPAGE, BENDING, AND EMBRITTLEMENT.
3. ALL WORK SHALL BE IN ACCORDANCE WITH AISC CODE OF STANDARD PRACTICE AND AWS D1.1.
4. MATERIAL CERTIFICATIONS SHALL BE SUBMITTED PRIOR TO FABRICATION.
5. WELDING INSPECTION AND WELDING INSPECTOR SHALL BE IN ACCORDANCE WITH AWS D1.1.
6. BASE PLATES SHALL BE TESTED FOR 100% OF THE VOLUME.

HOLD FOR FINAL DESIGN

PRELIMINARY
NOT FOR CONSTRUCTION

(1 REQUIRED)

NO	DATE	REVISIONS AND RECORD OF ISSUE	DRWN	REV'D	APPR	COMP
--						
--						
--						
--						
--						
--						
--						
A	02/28/2020	PRELIMINARY - ISSUED FOR BID	JB	NPR	-	S&L

SCALE:

PREP: MJD | CHKD: NPR

APPD: - | DATE: 02/28/2020

CONTRACTOR/INSTALLER SHALL TAKE ALL APPROPRIATE PRECAUTIONS TO ENSURE THE SAFETY OF ALL PEOPLE LOCATED ON THE WORK SITE; INCLUDING CONTRACTOR'S /INSTALLER'S PERSONNEL (OR THAT OF IT'S SUB-CONTRACTOR(S)) PERFORMING THE WORK.

ANY MODIFICATION OR ADDITION TO THIS DRAWING BY ANY ORGANIZATION OTHER THAN SARGENT & LUNDY IS NOT THE RESPONSIBILITY OF SARGENT & LUNDY.

Sargent & Lundy
55 EAST MONROE ST., CHICAGO, ILL.

NEXTera ENERGY TRANSMISSION NEW YORK

NEXTERA ENERGY TRANSMISSION NEW YORK, INC.
DYSINGER 345kV SWITCHYARD
345kV STRAIN BUS SUPPORT FRAME

DSY-S1-0121